TEXAS
Health and Human Services

Attachment H2

Drawings

EL PASO STATE SUPPORTED LIVING CENTER
SITE ELECTRICAL AND WATER DISTRIBUTION REPLACEMENT
6700 DELTA DRIVE
EL PASO, TEXAS 79905
JANUARY 10, 2019
SOLICITATION NO: 18-117-ELC

Project Directory

Texas Health and Human Services Commission
HHSC Maintenance and Construction
P.O. Box 12668 Mail Code 2064
Austin, Texas 78711–2668
(909 W. 45th Street, Bldg. 633, Austin, TX 78751)
Fax (512) 206–5930

Austin:
Director: John Robert 512–206–5888
Assistant Director: Mohammed Ally 512–206–5893
Construction Services Manager: Tony Hackney 512–206–5204
Project Manager: Al Widdifield, Architect Emeritus 325–795–5596

Facility:
El Paso State Supported Living Center
6700 Delta Drive
El Paso, TX 79905
Plant Maintenance Manager: James Lannon 915–782–6455

Consultant(s) to Owner:
EMC Engineers
2211 E. Missouri Ave., Suite W–107
El Paso, TX 79903
Principal: Melvin Glass, PE 915–781–2030 ext. 200
Project Engineer: Melvin Glass, P.E. (Mechanical) 915–781–2030 ext. 200
Project Engineer: Robert Blanchette, P.E. (Electrical) 915–781–2030 ext. 207
Construction Administration: Luis Carlos Bustos 915–781–2030 ext. 204

SHEET #	SHEET TITLE
FRONT END	
COVER	COVER SHEET WITH PROJECT INFO, VICINITY MAP, PROJECT DIRECTORY, TXHHS AND EMC LOGOS
PE–100	SITE PLAN WITH CONSTRUCTION ROUTE, STAGING AREAS, CODE INFORMATION, VICINITY MAP AND SHEET INDEX
UTILITIES	FIRE HYDRANT COVERAGE
PLUMBING	
P–100	GENERAL NOTES, LEGEND, MATERIAL SCHEDULES
P–200	PLUMBING DEMOLITION EXISTING WATER LOOP SITE PLAN
P–300	REMODEL WATER AND FIRE SITE PLAN (WEST LOOP)
P–400	REMODEL WATER AND FIRE SITE PLAN (EAST LOOP)
P–500	PLUMBING AND FIRE SCHEMATICS AND SCHEDULES
ELECTRICAL	
E–100	GENERAL NOTES, LEGEND, WIRING AND CONDUIT SCHEMATICS
E–200	ELECTRICAL DEMOLITION SITE PLAN
E–300	ELECTRICAL REMODEL SITE PLAN
E–400	PARTIAL EXISTING ELECTRICAL RISER DIAGRAM
E–401	REVISED ELECTRICAL RISER DIAGRAM, ELECTRICAL SCHEMATICS

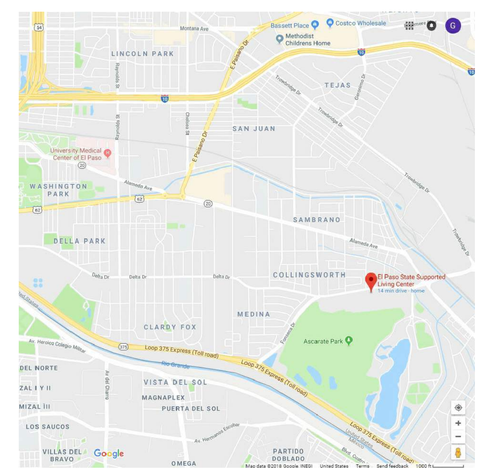

TEXAS Health and Human Services

TEXAS HEALTH AND HUMAN SERVICES COMMISSION
P.O. BOX 12668 MAIL CODE 2064
AUSTIN, TEXAS 78711–2668
(909 W. 45TH STREET, BLDG. 633, AUSTIN, TX 78751)
FAX: (512) 206–5930

EMC ENGINEERS

EMC ENGINEERS
2211 E. MISSOURI AVE. SUITE W–107
EL PASO, TEXAS. 79903
PH: 915–781–2030
FAX: 915–781–2055
TEXAS FIRM REG. #F2491
EMC PROJECT #1710051

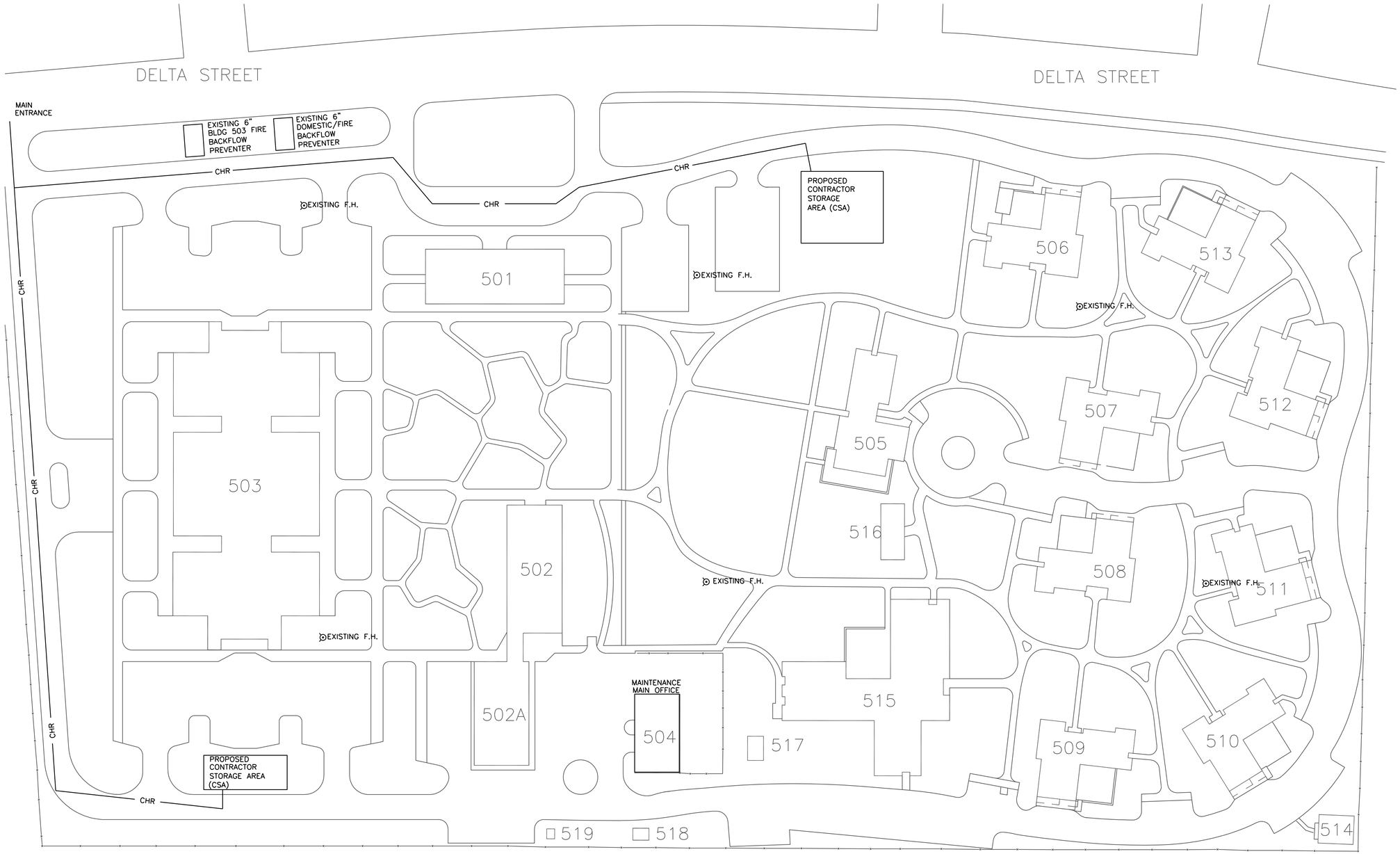

LEGEND

— CHR —	PROPOSED CONTRACTOR HAUL ROUTE
CSA	CONTRACTOR STORAGE AREA
	FIRE HYDRANT F.H.

N PLAN

1 PE-100

FACILITY SITE PLAN

SCALE: 1" = 50'-0"

50 25 0 50 100

THE SEAL APPEARING ON THIS DOCUMENT WAS AUTHORIZED BY ROBERT J. BLANCHETTE, P.E.#120820 OF EMC ENGINEERS (TEXAS FIRM REG. #F2491) ON JANUARY 8 2019. ALTERATION OF A SEALED DOCUMENT WITHOUT PROPER NOTIFICATION TO THE RESPONSIBLE ENGINEER IS AN OFFENSE UNDER THE TEXAS ENGINEERING PRACTICE ACT.

THE SEAL APPEARING ON THIS DOCUMENT WAS AUTHORIZED BY MELVIN G. GLASS, P.E. #64955 OF EMC ENGINEERS (TEXAS FIRM REG. #F2491) ON JANUARY 8 2019. ALTERATION OF A SEALED DOCUMENT WITHOUT PROPER NOTIFICATION TO THE RESPONSIBLE ENGINEER IS AN OFFENSE UNDER THE TEXAS ENGINEERING PRACTICE ACT.

THIS DOCUMENT, WHETHER IN HARD COPY OR MACHINE READABLE FORMAT, IS COPYRIGHTED AND AN INSTRUMENT OF SERVICES IN RESPECT TO THE PROJECT FOR WHICH IT WAS PREPARED. THIS DOCUMENT IS NOT INTENDED OR AUTHORIZED FOR REUSE BY ANY PARTY ON EXTENSIONS OF SUCH PROJECT OR ANY OTHER PROJECT. ANY REUSE, INCLUDING COPYING AND/OR MODIFYING THE DOCUMENT, WITHOUT WRITTEN PERMISSION FROM EMC ENGINEERS FOR THE SPECIFIC PURPOSE INTENDED, IS A VIOLATION OF FEDERAL COPYRIGHT LAW. UNAUTHORIZED USE OF THIS MATERIAL MAY RESULT IN CIVIL AND/OR CRIMINAL PENALTIES.
COPYRIGHT 2017 EMC ENGINEERS.

Rev.#	Date	Initials	Revision Description:
1	06/21/18	EMC	BUILDINGS 507, 512 REVISIONS

EMC ENGINEERS
2211 E. MISSOURI AVE., SUITE W-107
EL PASO, TEXAS, 79903
PH: 915-781-2030
FAX: 915-781-2040
TEXAS FIRM REG. #F2491
EMC PROJECT #1710051
ENGINEERS

Designed By: EMC
Drawn By: EMC
Checked By: EMC
Scale: AS SHOWN

Project: 18-117-EL PASO SSLC SITE ELECTRICAL AND WATER DISTRIBUTION REPLACEMENT

Location: 6700 DELTA DRIVE, EL PASO, TEXAS

Job Number: EMC-1710051

Date: 10-XX-18

Scale: AS SHOWN

Sheet PE-100
FACILITY SITE PLAN, AND SHEET INDEX

X of: X

LEGEND	
	FIRE HYDRANT
F	FIRE HOSE COVERAGE
	TRUCK DISTANCE TO FIRE HYDRANT

N

PLAN

1 / P-100

FIRE HYDRANT COVERAGE

SCALE: 1" = 50'-0"

50 25 0 50 100

EMC ENGINEERS
2211 E. MISSOURI AVE., SUITE W-107
EL PASO, TEXAS, 79903
PH: 915-781-2030
FAX: 915-781-2040
TEXAS FIRM REG. #F-2491
EMC PROJECT #XXXXXX

EMC ENGINEERS

Rev.#	Date	Initials	Revision Description:

Designed By: EMC
Drawn By: EMC
Checked By: EMC
Scale: AS SHOWN

Project: EL PASO SSLC WATER LINE REPLACEMENT
Location: EL PASO, TEXAS

Job Number: EMC-1710051
Date: 02-02-18
Scale: AS SHOWN
Sheet P-100
of:

THIS DOCUMENT, WHETHER IN HARD COPY OR MACHINE READABLE FORMAT, IS COPYRIGHTED AND AN INSTRUMENT OF SERVICES IN RESPECT TO THE PROJECT FOR WHICH IT WAS PREPARED. THIS DOCUMENT IS NOT INTENDED OR AUTHORIZED FOR REUSE BY ANY PARTY ON EXTENSIONS OF SUCH PROJECT OR ANY OTHER PROJECT. ANY REUSE, INCLUDING COPYING AND/OR MODIFYING THE DOCUMENT, WITHOUT WRITTEN PERMISSION FROM EMC ENGINEERS FOR THE SPECIFIC PURPOSE INTENDED, IS A VIOLATION OF FEDERAL COPYRIGHT LAW. UNAUTHORIZED USE OF THIS MATERIAL MAY RESULT IN CIVIL AND/OR CRIMINAL PENALTIES.
COPYRIGHT 2017 EMC ENGINEERS.

PLUMBING SYMBOL LEGEND

ABBRV	SYMBOL	DESCRIPTION
GENERAL		
	N	NORTH DIRECTION
	1 A-5	DETAIL NUMBER
	A-7	SHEET NUMBER OF DRAWING WHERE DETAIL IS SHOWN
	A- A-7	SHEET NUMBER OF DRAWING WHERE DETAIL IS REFERENCED
	A- A-7	DIRECTION OF SITE OF ELEV. ON PLAN
	A- A-7	SHEET NUMBER OF DRAWING WHERE ELEV. IS SHOWN
	1 A-5	DRAWING NUMBER SHEET REFERENCE
	XX-##	FIXTURE I.D. - SEE FIXTURE SCHEDULES
	XX-XX	NEW EQUIPMENT ABBREVIATION AND NO.
		INDICATES PIPING CONTINUATION
		FLOW DIRECTION
FLR		FLOOR
CLG		CEILING
AFF		ABOVE FINISHED FLOOR
BFF		BELOW FINISHED FLOOR
		FINISHED FLOOR
AFG		ABOVE FINISHED GRADE
BFG		BELOW FINISHED GRADE
EXIST		EXISTING
NIC		NOT IN CONSTRUCTION
		UNDERGROUND
(SYMBOL) E	(SYMBOL) E	INDICATES EXISTING SERVICE
	W	UTILITY WATER SERVICE
CW		DOMESTIC COLD WATER
HW		DOMESTIC HOT WATER
		ELBOW, TURNED DOWN
		ELBOW, TURNED UP
		TEE, OUTLET DOWN
		TEE, OUTLET UP
		CAP OR PLUG
		ISOLATION VALVE, BALL TYPE UNLESS SPECIFIED OTHERWISE
BLV		BALL VALVE
BTFLV		BUTTERFLY VALVE
		CHECK VALVE (TYPE AS SPECIFIED)
		STRAINER
		STRAINER WITH BLOW DOWN
		UNION

NOTES: GENERAL LEGEND NOT ALL ITEMS APPLICABLE TO THIS PROJECT

PLUMBING GENERAL NOTES:

1. THESE PLUMBING/FIRE PROTECTION GENERAL NOTES ARE APPLICABLE TO ALL PLUMBING SHEETS IN THIS PROJECT SET.

2. THE PLUMBING WORK SHALL BE PERFORMED IN STRICT ACCORDANCE WITH THE APPLICABLE AND ADOPTED PROVISIONS OF THE FOLLOWING CODES:
   2015 INTERNATIONAL BUILDING CODE
   2015 INTERNATIONAL PLUMBING CODE
   2015 INTERNATIONAL MECHANICAL CODE
   2015 INTERNATIONAL FIRE CODE
   2015 INTERNATIONAL FUEL CODE
   2015 INTERNATIONAL ENERGY CONSERVATION CODE
   AS ADOPTED AND INTERPRETED BY THE STATE OF TEXAS, TEXAS HEALTH AND HUMAN SERVICES COMMISSION STANDARDS AND GUIDELINES, AND THE NATIONAL FIRE PROTECTION ASSOCIATION (NFPA) REGULATIONS, CURRENT ADOPTED EDITION REGARDING MECHANICAL SYSTEMS, FIRE PROTECTION AND ALARM SYSTEMS AND ASSOCIATED PLUMBING AND ELECTRICAL SYSTEMS. ALL LABOR AND MATERIALS NECESSARY TO COMPLY WITH RULES, REGULATIONS AND ORDINANCES SHALL BE PROVIDED. WHERE THE DRAWINGS INDICATE MATERIALS OR CONSTRUCTION IN EXCESS OF CODE REQUIREMENTS, THE DRAWINGS SHALL GOVERN. THE CONTRACTOR SHALL HOLD AND SAVE THE OWNER AND ENGINEER FREE AND HARMLESS FROM LIABILITY OF ANY NATURE OR KIND ARISING FROM HIS FAILURE TO COMPLY WITH ALL APPLICABLE CODES AND ORDINANCES.

3. THE CONTRACTOR SHALL COORDINATE WITH OWNER, ARCHITECT, AND ENGINEER ANY WORK THAT HAS THE POTENTIAL TO HINDER MECHANICAL AND PLUMBING SERVICES TO AREA OUTSIDE OF THIS CONTRACT. ALL SHUT-DOWNS OR TIE-INS RELATING TO THESE SYSTEMS SHALL BE SCHEDULED AND SUBMITTED IN WRITING AND TO BE APPROVED BY THE OWNER, ARCHITECT, AND THIS ENGINEER OFFICE. CONTRACTOR SHALL SUBMIT IN WRITING A SCHEDULE FOR PHASING OF CONSTRUCTION THAT INDICATES AREAS OF FIRST PRIORITY DURING EACH PHASE AND ANTICIPATED COMPLETION TIMES. SCHEDULES SHALL BE SUBMITTED A MINIMUM OF ONE WEEK PRIOR TO COMMENCING WORK. OWNER, ARCHITECT AND ENGINEER SHALL REVIEW THESE SCHEDULES AND NOTIFY CONTRACTOR OF ACCEPTANCE PRIOR TO COMMENCEMENT OF WORK.

4. ALL MATERIALS AND LABOR NECESSARY TO COMPLY WITH CODES AND RULES, REGULATIONS AND ORDINANCES SHALL BE PROVIDED. WHERE THE DRAWINGS AND/OR SPECIFICATIONS INDICATE MATERIALS OR CONSTRUCTION IN EXCESS OF CODE REQUIREMENTS, THE DRAWINGS AND/OR SPECIFICATIONS SHALL GOVERN. THE CONTRACTOR SHALL HOLD AND SAVE THE OWNER, ARCHITECT AND ENGINEERS FREE AND HARMLESS FROM LIABILITY OF ANY NATURE OR KIND ARISING FORM HIS FAILURE TO COMPLY WITH ALL APPLICABLE CODES AND ORDINANCES.

5. Not Used

6. BEFORE YOU DIG ALL EXISTING UTILITIES I.E. WATER, SEWER, GAS, FIRE LINE, ELECTRICITY, TELEPHONE, CABLE, IRRIGATION LINES, SHALL BE LOCATED AND CLEARLY MARKED IN ORDER TO AVOID UNNECESSARY SHUT DOWNS AND EMERGENCY. CONTRACTOR SHALL COORDINATE INSTALLATION OF NEW WATER TAP AND WATER MAIN, NEW SEWER TAP AND SEWER MAIN, AND ANY REQUIRED FIRE PROTECTION TAP AND WATER MAIN WITH EL PASO WATER UTILITY AND NATURAL GAS TAP AND GAS MAIN PIPING FOR FACILITY WITH TEXAS GAS. IF ROADWAY IS DESIGNATED A TXDOT ROADWAY THE CONTRACTOR SHALL COORDINATE AND OBTAIN ALL TXDOT APPROVALS AND PERMITS FOR THE INSTALLATION OF UTILITY MAINS IN THE TXDOT ROADWAY.

7. EACH CONTRACTOR SHALL GIVE ALL REQUISITE NOTICES AND FILLED OUT APPLICATIONS, OBTAIN AND PAY FOR ALL PERMITS, DEPOSITS AND FEES (INCLUDING UTILITY CONNECTIONS FEES, ANY UTILITY EXTENSION FEES, TAP FEES, DEVELOPMENT FEES, AND IMPACT FEES) NECESSARY FOR THE INSTALLATION OF WORK UNDER THESE NOTES. TWO (2) COPIES OF CERTIFICATES OF APPROVAL SHALL BE OBTAINED FROM ALL AUTHORITIES ISSUING SAME AND SHALL BE TURNED OVER TO OWNER, ARCHITECT, ENGINEER PRIOR TO FINAL ACCEPTANCE OF THE WORK.

8. REQUIRED INSURANCE SHALL BE PROVIDED BY THIS CONTRACTOR FOR PROTECTION AGAINST PUBLIC LIABILITY AND PROPERTY DAMAGE FOR THE DURATION OF WORK. CONTRACTOR SHALL SECURE AND PAY ALL PERMITS, FEES, INSPECTIONS, AND TESTS UNLESS OTHERWISE INDICATED. COORDINATE WITH ARCHITECT, ENGINEER, OWNER. SUBSTITUTIONS REQUESTED BY THE CONTRACTOR SHALL BE PAID FOR BY THE CONTRACTOR.

9. ALL WORK SHALL CONFORM WITH FEDERAL, STATE, AND LOCAL CODES, RULES, AND REGULATIONS. ALL WORK SHALL BE PERFORMED BY A LICENSED CONTRACTOR IN A FIRST CLASS WORKMANLIKE MANNER. THE SYSTEMS SHALL BE INSTALLED COMPLETE AND FULLY OPERATIVE UNLESS OTHERWISE INDICATED

10. CONTRACTOR SHALL FIELD VERIFY EXISTING CONDITIONS AND PROVIDE A WRITTEN REPORT TO THE ARCHITECT AND THE ENGINEERING OFFICES. THIS REPORT SHALL DESCRIBE EXISTING DAMAGE OR OTHER CONDITIONS THAT MAY INTERFERE WITH THIS PROPOSED NEW WORK. THIS SITE SURVEY SHALL ALSO INCLUDE VERIFICATION OF SIZES, LOCATIONS, AND CONDITIONS OF EXISTING UTILITIES. QUESTIONS REGARDING THESE DRAWINGS SHALSE BE ADDRESSED TO THE ENGINEER PRIOR TO THE AWARDING OF THE CONTRACT. OTHERWISE THE ENGINEER'S INTERPRETATION OF THE MEANING AND INTENT OF THE DRAWINGS SHALL BE FINAL.

11. DURING CONSTRUCTION IF THE CONTRACTOR ENCOUNTER AND DAMAGES THE EXISTING UNDERGROUND INFRASTRUCTURE THE CONTRACTOR SHALL REPAIR THE INFRASTRUCTURE AT NO ADDITIONAL COSTS TO THE OWNER. WHERE STRUCTURE IS ALTERED OR DAMAGES DURING CONSTRUCTION, INSTALLATION AND REMOVAL OF EQUIPMENT OR FIXTURES, THE CONTRACTOR SHALL REPAIR THE AREA TO MATCH SURROUNDING AREA PER ARCHITECTURAL SPECIFICATIONS CUTTING, TRENCHING AND PENETRATIONS THROUGH FIRE WALL, CONCRETE AND OTHER STRUCTURES ARE A PART OF THIS PROJECT SCOPE AND SHALL BE INCLUDED IN THE CONTRACTOR'S BID. ALL EXCAVATION AND BACKFILLING REQUIRED FOR PLUMBING WORK IS ALSO INCLUDED AS PART OF THIS CONTRACT AND SHALL BE INCLUDED IN CONTRACTOR'S BID.

12. ALL SYSTEMS AND COMPONENTS SHALL BE APPROVED FOR THE PURPOSE FOR WHICH THEY ARE INSTALLED. ALL EQUIPMENT AND MATERIALS SHALL BE NEW AND FROM ESTABLISHED AMERICAN SUPPLIERS UNLESS OTHERWISE INDICATED.

13. ALL EQUIPMENT PARAMETERS SHOWN ARE FOR PERFORMANCE AT SITE ALTITUDE. SUPPLIERS SHALL SELECT AND DEMONSTRATE THAT THEIR EQUIPMENT MEETS THE DESIGN CONDITIONS AT SITE ALTITUDE.

14. PLUMBING CONTRACTOR SHALL COORDINATE WITH ELECTRICAL CONTRACTOR THE ELECTRICAL REQUIREMENTS, INCLUDING POWER, CONTROL, COMMUNICATION, AND MONITORING, OF EACH DEVICE PROVIDED AND/OR INSTALLED BY PLUMBING CONTRACTOR.

15. SUPPORT SYSTEM FOR PIPING MATERIALS AND EQUIPMENT SUPPORTED BY THE BUILDING STRUCTURE SHALL BE SUBMITTED TO THE STRUCTURAL ENGINEER AND ARCHITECT FOR APPROVAL PRIOR TO PURCHASE AND INSTALLATION. NO WIRE OR PERFORATED STRAP WILL BE PERMITTED FOR ANY HANGER OR SUPPORT.

16. CONTRACTOR SHALL NOT CUT, DRILL, OR ALTER ANY ELEMENT OF ANY WALLS, FLOORS CEILINGS, ROOFS, AND SLABS WITHOUT FIRST RECEIVING INSTRUCTIONS FROM ARCHITECT, ENGINEER. ALL CUTS SHALL BE MADE WITH A CUTTING TOOL.

17. PATCHING OR SEALING OF CUTS OR PENETRATIONS SHALL BE DONE BY CONTRACTOR PER INSTRUCTIONS FROM AND TO FINAL APPROVAL OF ARCHITECT AND ENGINEER. COORDINATE WITH GENERAL CONTRACTOR.

18. CONTRACTOR SHALL FIELD VERIFY CONDITION OF EXISTING EQUIPMENT AND PROVIDE NECESSARY COMPONENTS TO ASSEMBLE AND TO START-UP COMPLETE AND FULLY OPERATIONAL SYSTEMS.

19. BEFORE INSTALLATION, EQUIPMENT AND DEVICES INCLUDING, BUT NOT LIMITED TO, ANY DEVICE WITH ELECTRICAL CONNECTIONS, DUCTWORK, INSULATION, PIPING, VALVES, AND AIR DEVICES SHALL NOT BE STORED DIRECTLY ON GRADE OR ON A SLAB OR FLOOR. BEFORE AND AFTER INSTALLATION, SUCH EQUIPMENT AND DEVICES SHALL BE PROTECTED FROM ENTRY OF DIRT, TRASH WATER (EXCEPT AS REQUIRED), VERMIN.

20. PROVIDE THE OWNER WITH THREE (3) COPIES OF OPERATION AND MAINTENANCE (O&M'S) MANUALS. THE O&M'S SHALL INCLUDE ALL INSTALLATIONS INSTRUCTIONS FOR PRODUCT DATA, WARRANTIES, CONTACT INFORMATION DURING WARRANTY PERIOD, COPIES OF ALL PERMIT INFORMATION, AND AIR AND HYDRONIC TESTING AND BALANCING REPORTS IN 3-RING BINDERS AND ON CD VERSION. ALL LABOR AND MATERIALS PROVIDED FROM CONTRACTOR SHALL HAVE COMPLETE ONE (1) YEAR WARRANTY. ALL COMPRESSORS SHALL BE WARRANTIED FOR FIVE (5) YEARS, INCLUDING LABOR AND MATERIALS.

21. OPERATING TESTS AND CLEANING PROCEDURES SHALL BE PERFORMED AND REPORTS SHALL BE ISSUED PER CODE REQUIREMENTS, MANUFACTURER'S RECOMMENDATIONS.

22. PIPING ROUTED ON THE ROOF SHALL BE SUPPORTED BY FACTORY MADE PIPE SUPPORTS PER MANUFACTURER'S RECOMMENDATIONS.

23. CONTRACTOR SHALL PROVIDE AND INSTALL IDENTIFICATION TAGS FOR EQUIPMENT AND PIPING PER SPECIFICATIONS AND ANSI/ASME 13.1-2015 - SCHEME FOR THE IDENTIFICATION FOR PIPING SYSTEMS.

24. LOCATIONS OF CEILING, ROOF, AND ATTIC PLUMBING EQUIPMENT ARE APPROXIMATE AS SHOWN. PLUMBING CONTRACTOR SHALL FIELD ADJUST AS REQUIRED.

25. CONTRACTOR SHALL TAKE PRECAUTIONS PER THE ARCHITECT'S INSTRUCTIONS TO PROTECT EXISTING TREES AND /OR OTHER SITE VEGETATION.

26. FOR OUTDOOR EQUIPMENT ON GRADE AND INDOOR FLOOR MOUNTED EQUIPMENT, THE CONTRACTOR SHALL CONSTRUCT LEVEL 3000 PSI CONCRETE(28 DAY COMPRESSIVE STRENGTH) SLABS WITH FINISHED EDGES, WIRE REINFORCED MINIMUM 6X6 W1.4/1.4 OR HEAVIER PER ASTM A185, MINIMUM 3 1/2 INCH THICK, AND MINIMUM 6 INC LARGER ON ALL SIDES THAN THE EQUIPMENT BEING SUPPORTED. THE PAD SHALL HAVE 2 COATS OF EPOXY SEALANT TO SEAL THE PAD.

27. ALL PIPING, PLUMBING AND DUCTWORK OPENINGS SHALL BE CAPPED DURING DEMOLITION AND CONSTRUCTION.

28. EXISTING MECHANICAL EQUIPMENT, COMPONENTS, AND PIPING BEING REUSED SHALL BE INSPECTED, CLEANED, AND PRESSURE TESTED PER THE TESTING REQUIREMENTS STATED BELOW. CONTRACTOR SHALL FIELD VERIFY EXISTING MECHANICAL EQUIPMENT, COMPONENTS, AND PIPING CONDITIONS AND PROVIDE A WRITTEN REPORT TO THIS ENGINEERING OFFICES. THIS REPORT SHALL DESCRIBE EXISTING CONDITION AND ANY DAMAGE OR OTHER CONDITIONS THAT MAY INTERFERE WITH THIS PROPOSED NEW WORK.

29. SITE VISIT REPORTS
   DURING THE COURSE OF THE JOB, THE ENGINEER WILL MAKE SITE AND INSPECTION VISITS TO OBSERVE WORK IN PROGRESS AND WILL SUBSEQUENTLY PREPARE A WRITTEN SITE VISIT REPORT, WHICH WILL BE SENT TO THE CONTRACTOR AND TO WHOMEVER ELSE THE ENGINEER DESIRES. THE CONTRACTOR SHALL PROVIDE 48 HOUR WRITTEN NOTICE TO THE ENGINEER FOR ALL TESTING AND CITY INSPECTION SO THEY CAN ATTEND THESE INSPECTIONS. THE CONTRACTOR SHALL PREPARE A WRITTEN AND TYPED RESPONSE WITHIN SEVEN (7) CALENDAR DAYS OF HIS RECEIVING THE SITE VISIT REPORT. THE CONTRACTORS SHALL ACCOMPANY THE ENGINEER DURING THIS FINAL PUNCHLIST VISIT UPON THE REQUEST OF THE ENGINEER. THE GENERAL CONTRACTOR SHALL INCLUDE IN HIS RESPONSE THE FOLLOWING INFORMATION.
   A. DATE OF SITE VISIT BY THE ENGINEER,
   B. DATE OF RECEIPT OF THE SITE VISIT REPORT,
   C. NAME AND TITLE OF THE PREPARER OF THE RESPONSE,
   D. AN ITEM NUMBER REFERENCED TO THE SITE REPORT,
   E. A BRIEF THREE OR FOUR WORD DESCRIPTION OF THE ITEM,
   F. THE CONTRACTOR OR SUBCONTRACTOR AFFECTED,
   G. THE PROPOSED COURSE OF ACTION, AND
   H. AN EXPECTED TIME OF COMPLETION OF THE ACTION.

30. FINAL PUNCH REPORTS
   AT THE COMPLETION OF THE JOB, THE ENGINEER WILL MAKE PUNCHLIST SITE VISITS TO OBSERVE COMPLETED WORK AND WILL SUBSEQUENTLY PREPARE A WRITTEN SITE VISIT PUNCHLIST REPORT, WHICH WILL BE SENT TO THE CONTRACTOR AND TO WHOMEVER ELSE THE ENGINEER DESIRES. THE CONTRACTOR UPON COMPLETION OF THE LISTED PUNCHLIST ITEMS SHALL PREPARE A TYPE WRITTEN RESPONSE TO THE LIST INDICATING COMPLETION OF EACH ITEM. THE CONTRACTOR SHALL INCLUDE IN HIS RESPONSE THE RESOLUTION OF EACH ITEM. THE CONTRACTORS SHALL ACCOMPANY THE ENGINEER DURING THIS FINAL PUNCHLIST VISIT UPON THE REQUEST OF THE ENGINEER.

31. SUBSTITUTED PRODUCTS
   A. MATERIAL OR EQUIPMENT SPECIFIED BY MANUFACTURER'S NAME IS BEING USED AS A BASIS OF STANDARD. NO SUBSTITUTION IS ALLOWABLE WITHOUT ENGINEER'S WRITTEN APPROVAL TEN (10) DAYS PRIOR TO BID DUE DATE UNLESS THE MANUFACTURER IS LISTED ON THE DRAWINGS OR IN THE SPECIFICATION AS BEING A PREAPPROVED ALTERNATIVE MANUFACTURER. ANY SUBMITTAL RECEIVED WITHOUT SUCH WRITTEN APPROVAL OR PRIOR APPROVAL IS SUBJECT TO UNQUALIFIED REJECTION.
   B. IT SHALL BE THE CONTRACTOR'S RESPONSIBILITY TO VERIFY THAT SUBMITTED SUBSTITUTE EQUIPMENT WILL FIT IN SPACE AVAILABLE. THE CONTRACTOR'S SUBMITTAL FOR ACCEPTANCE OF THE SUBSTITUTE SHALL INCLUDE A WRITTEN STATEMENT OF WHETHER OR NOT SUCH ACCEPTANCE WOULD REQUIRE ANY SUBSEQUENT OR ASSOCIATED CHANGES TO THE DRAWINGS OR SPECIFICATIONS. ANY SUCH CHANGES SHALL BE DESCRIBED IN WRITING, BRIEFLY BUT COMPLETE.
   C. THE CONTRACTOR SHALL BE RESPONSIBLE FOR THE COSTS OF ANY SUCH MODIFICATIONS DUE TO SUBSTITUTION OF MATERIALS OR EQUIPMENT FOR THAT WHICH WAS SPECIFIED OR SCHEDULED. THE COST SHALL BE COMPLETE, THAT IS, IT SHALL INCLUDE THE COST EFFECT OF ANY AND ALL OTHER TRADES.
   D. THE ENGINEER MAY REQUEST DETAILED SHOP DRAWING OR PLAN LAYOUTS OF MECHANICAL ROOMS OR SYSTEMS OF THE SUBSTITUTED EQUIPMENT.
   E. SHOULD A SUBSTITUTION BE APPROVED BY THE ENGINEER (BASED UPON THE SUBSTITUTION SUBMITTAL REVIEW) AND ACCEPTED, AND SHOULD THE SUBSTITUTE MATERIAL OR EQUIPMENT PROVE DEFECTIVE, NOT MEETING DESIGN PARAMETERS, OR OTHERWISE UNSATISFACTORY FOR THE SERVICE INTENDED WITHIN THE GUARANTEE PERIOD, THIS MATERIAL OR EQUIPMENT SHALL BE REPLACED WITH THE MATERIAL OR EQUIPMENT SPECIFIED AT NO ADDITIONAL COST TO THE OWNER.

32. SUBMITTAL REQUIREMENTS
   A. THE INTENT OF THIS SECTION IS TO GIVE GENERAL SUBMITTAL INFORMATION, REFER TO SPECIFIC SUBMITTAL INFORMATION IN THE SUBSEQUENT ELECTRICAL SECTIONS.
   B. WITHIN 10 DAYS AFTER AWARD OF THE CONTRACT, AND BEFORE ORDERS ARE PLACED, CONTRACTOR SHALL SUBMIT SPECIFIC INFORMATION ON LIST OF EQUIPMENT AND PRINCIPAL MATERIALS SPECIFIED. CONTRACTOR SHALL INDICATE AND/OR PROVIDE NAMES OF MANUFACTURERS, CATALOG AND MODEL NUMBERS, CUT SHEETS, AND SUCH OTHER SUPPLEMENTARY INFORMATION AS NECESSARY FOR EVALUATION. MINIMUM OF SIX (6) COPIES, OR AS DIRECTED BY THE ENGINEER, OF EACH SHALL BE SUBMITTED AND SHALL INCLUDE ALL ITEMS MENTIONED BY MODEL NUMBER AND/OR MANUFACTURER'S NAME IN THE SPECIFICATIONS OR IN SCHEDULES ON THE DRAWINGS.
   C. REQUIREMENTS FOR EACH SUBMITTAL:
      1. BEAR A DATED STAMP OR SPECIFIC WRITTEN INDICATION THAT THE CONTRACTOR HAS REVIEWED AND APPROVED ALL SUBMITTAL PRIOR TO SUBMISSION TO ENGINEER.
      2. HAVE ALL INFORMATION DELETED BY CONTRACTOR THAT PERTAINS TO THE MEANS AND METHODS OF CONSTRUCTION OR TO FABRICATION, ASSEMBLY, INSTALLATION, OR ERECTION APPROVAL BY ENGINEER SHALL NOT EXTEND TO THESE AREAS UNLESS SPECIFICALLY NOTED BY ENGINEER).
      3. **BE CLEARLY AND SPECIFICALLY MARKED AS TO WHICH SPECIFIC PIECE OF EQUIPMENT IS BEING** SUBMITTED. BY USE OF A PERMANENT MARKER, STAMP, ETC., SO AS TO DISTINGUISH IT FROM OTHER PIECES OF EQUIPMENT THAT MAY OCCUR ON THE SAME PAGE.
      4. **BE CLEARLY AND SPECIFICALLY MARKED AS TO WHICH AVAILABLE OPTIONS ARE BEING SUBMITTED** THAT ARE ASSOCIATED WITH A PIECE OF EQUIPMENT, AND BE COMPLETE WITH RESPECT TO QUANTITIES, DIMENSIONS, SPECIFIC PERFORMANCE, MATERIALS, AND SIMILAR DATA TO ENABLE THE ENGINEER TO REVIEW THE PROPOSED EQUIPMENT.
      5. BE COMPLETE WITH RESPECT TO QUANTITIES, DIMENSIONS, SPECIFIC PERFORMANCE, MATERIALS, AND SIMILAR DATA TO ENABLE THE ENGINEER TO REVIEW THE PROPOSED EQUIPMENT
      6. **BE CLEARLY AND SPECIFICALLY MARKED AS TO ANY AND ALL SUBMITTAL DEVIATIONS FROM THE** DESIGN SPECIFICATIONS REQUIREMENTS SHALL BE PROVIDED IN WRITTEN FORM.
      7. OMISSION BY CONTRACTOR OF ANY OF THE ABOVE REQUIREMENTS OR SUBMITTALS WILL SUBJECT SUBMITTAL TO AUTOMATIC REJECTION WITHOUT REVIEW.
      8. ANY SUBMITTALS RECEIVED BY ENGINEER THAT WERE NOT REQUESTED SHALL BE RETURNED WITHOUT REVIEW OF ANY KIND. SUBMITTALS SHALL INDICATE MINIMUM ACCESS AND SERVICE CLEARANCES IF REQUIRED BY THE SUBMITTED EQUIPMENT.
   D. INSTALLATION INSTRUCTIONS - FOR CERTAIN PRODUCTS OR SYSTEMS AS IDENTIFIED IN SUBSEQUENT SPECIFICATIONS SECTIONS OR ON THE DRAWINGS, THE CONTRACTOR SHALL BE REQUIRED TO PROVIDE COPIES OF MANUFACTURER'S INSTALLATION INSTRUCTIONS WITH THE SUBMITTAL. WHEN REQUIRED AS SUCH, THE INSTALLATION INSTRUCTIONS ARE CONSIDERED PART OF THE SUBMITTAL AND THEN OMISSION MAY RESULT IN AUTOMATIC REJECTION OF THE SUBMITTAL. WHERE MORE THAN ONE IDENTICAL DEVICE ARE SCHEDULED, ONLY ONE SET OF INSTALLATION INSTRUCTIONS NEEDS TO BE SUBMITTED, E.G. IF SEVEN 10 TON RTUS ARE SCHEDULED, ONLY ONE OF EACH TYPE OF RTU INSTALLATION INSTRUCTION NEEDS TO BE SUBMITTED. SIMILARLY, IF ONE SET OF INSTALLATION INSTRUCTIONS IS IDENTIFIED BY THE MANUFACTURER AND ON THE INSTRUCTIONS TO BE APPLICABLE TO MORE THAN ONE TYPE OR SIZE OF DEVICES, E.G. IF ONE SET OF RTU INSTRUCTIONS IS GOOD FOR EACH TYPE OF RTU, THEN ONLY ONE INSTRUCTION SET IS REQUIRED FOR THESE DEVICES.
   E. THIS ENGINEER WILL REVIEW THE SUBMITTALS FOR APPROVAL TWICE. ANY ADDITIONAL REVIEWS THAT ARE REQUIRED BY THE ENGINEER FOR WHATEVER REASON AFTER THE INITIAL TWO REVIEWS WILL RESULT IN ADDITIONAL COMPENSATION FOR THE ENGINEER'S TIME BY THE SUBMITTING CONTRACTOR AT THE ENGINEER'S RATE.

33. REQUIRED SHOP DRAWING SUBMITTALS
   A. PIPING MATERIALS, CONNECTIONS, FITTINGS, AND SOLDER
   B. PIPING ANCHORS, SUPPORTS AND HANGERS
   C. FIRE PROTECTION SYSTEM INCLUDING DRAWINGS, HYDRAULIC CALCULATIONS, AND EQUIPMENT SUBMITTALS.

PLUMBING

34. FIRESTOPPING OF PENETRATIONS IN FIRE-RATED WALLS, FLOORS, ETC. SHALL BE DONE BY A PLUMBING CONTRACTOR. PLUMBING CONTRACTOR SHALL MAKE REQUIRED PENETRATIONS IN RATED WALL, FLOORS, ETC. NEATLY AND WITH A CUTTING TOOL, THE CONTRACTOR SHALL MAKE THE PENETRATIONS NO LARGER THAN NECESSARY, AND THE PLUMBING CONTRACTOR SHALL COORDINATE ALL SUCH PENETRATIONS WITH THE FIRESTOPPING CONTRACTOR BEFORE SUCH PENETRATIONS ARE MADE.

35. PROVIDE 1/2" MANUAL AIR VENTS WITH ISOLATION VALVE IN DOMESTIC COLD, HOT, AND HOT WATER CIRCULATING PIPING AT ALL HIGHPOINTS IN SYSTEM AS REQUIRED.

36. PROVIDE ISOLATION VALVES IN CW, HW, AND HWR PIPING AS NEEDED OR AS SHOWN FOR ALL GROUPS OF FIXTURES.

37. PROJECT VALVES:
   A. **BALL VALVES: MANUFACTURERS: NIBCO. MILWAUKEE. GRINNELL CORP. OR EQUAL. BRONZE TWO-PIECE** BODY (2 INCH OR LESS), CAST STEEL BODY (OVER 2 INCHES) STAINLESS FULL PORTED STEEL BALL, TEFLON SEATS AND STUFFING BOX RING, LEVER HANDLE AND BALANCING STOPS, FLANGED, SOLDER OR THREADED ENDS WITH UNION. THE VALVE ASSEMBLY SHALL BE LEAD FREE.
   B **PLUG VALVESS: MANUFACTURERS: NOSTROM. GRINNELL CORP., HOMESTEAD VALVE DIVISION., MUELLER** STEAM SPECIALTY OR EQUAL. BRONZE BODY, BRONZE TAPERED PLUG, (2 INCH OR LESS), CAST STEEL BODY WITH TAPERED IRON PLUG (OVER 2 INCHES) GREASEABLE LUBRICATED, TEFLON PACKING, THREADED ENDS. THE VALVE ASSEMBLY SHALL BE LEAD FREE
   C. **BUTTERFLY VALVESS: MANUFACTURERS: NIBCO. MILWAUKEE. GRINNELL CORP. OR EQUAL. BRONZE BODY.** STAINLESS STEEL DISC (4 INCH OR LESS), CAST OR DUCTILE IRON BODY, CHROME PLATED DUCTILE IRON DISC (OVER 4 INCHES), RESILIENT REPLACEABLE SEAT, THREADED ENDS, EXTENDED NECK, INFINITE POSITION LEVER HANDLE WITH MEMORY STOP. THE VALVE ASSEMBLY SHALL BE LEAD FREE

38. PLUMBING PIPING MATERIAL SHALL BE IN ACCORDANCE WITH MINIMUM PLUMBING PIPE MATERIAL REQUIREMENTS SCHEDULE. HANGERS AND SUPPORTS SHALL BE IN ACCORDANCE WITH MSS-SP58, MSS-SP69, AND MSS-SP89.

39. TESTS:
   A. TESTS SHALL BE COMPLETE PRIOR TO FINAL INSPECTION AND PRIOR TO COVERING WITH INSULATION OR EARTH.
   B. ALL PRESSURE TESTS SHALL BE CHARTED USING A STRIPE CHART RECORDER WITH ENOUGH PAPER FOR THE DURATION OF THE TEST SHOWN. REFER TO OTHER SPECIFICATIONS FOR ADDITIONAL REQUIREMENTS. THE TEST RESULTS SHALL INCLUDE TEST RUN, TEST DATE, PERSON DOING THE TESTING, AND ENGINEER OR AUTHORITY HAVING JURISDICTION SIGNATURE.
   C. ALL TESTS SHALL BE WITNESSED AND APPROVED BY THE ENGINEER AND THE LOCAL AUTHORITY HAVING JURISDICTION BEFORE COVERING OR INSULATING. PROVIDE ENGINEER WITH A MINIMUM OF 24 HOUR WRITTEN NOTICE PRIOR TO ANY TESTING.
   D. HYDRAULICALLY TEST ALL DOMESTIC COLD WATER SERVICE LINES AT 200 PSIG. TEST TO BE HELD FOR A MINIMUM OF SIX (6) HOURS.
   E. PROPRESS SYSTEM - HYDRAULICALLY TEST ALL PROPRESS FITTING DOMESTIC COLD, HOT, RECIRCULATING HOT WATER AND SOFT WATER SERVICE LINES AS FOLLOWS:
      1. HYDRAULICALLY TEST LINES AT 85 PSIG TO ALLOW SEATING OF THE PROPRESS FITTING?S GASKETS.
      2. GASKET SEATING TEST TO BE HELD FOR A MINIMUM OF ONE (1) HOUR.
      3. THEN HYDRAULICALLY TEST LINES AT 200 PSIG.
      4. FULL HYDRAULIC TEST TO BE HELD FOR A MINIMUM OF SIX (6) HOURS.
   F. HYDRAULICALLY TEST FIRE PROTECTION AT 200 PSIG. TEST TO BE HELD FOR A MINIMUM OF SIX (6) HOURS.
   G. THE SATISFACTORY OPERATION OF BLOWERS, PUMPS AND OTHER EQUIPMENT WITH MOVING PARTS SHALL BE DEMONSTRATED TO THE ENGINEER. EQUIPMENT WITHOUT MOVABLE PARTS SHALL HAVE PRESSURE OR OTHER TESTS PERFORMED BY THE CONTRACTOR TO DEMONSTRATE SATISFACTORY OPERATION.
   H. FURNISH ALL INSTRUMENTS, PUMPS, BLOWERS AND EQUIPMENT REQUIRED FOR THE TESTING.
   I. PROVIDE WRITTEN APPROVED COPIES OF THESE TEST REPORTS FOR INCLUSION ON THE OPERATIONS AND MAINTENANCE MANUALS AND SUBMIT ONE COPY TO THE MECHANICAL ENGINEER.

FIRE

40. THE INTENT OF THIS PROJECT IS TO PROVIDE A NEW 8 INCH FIRE MAIN LOOP FOR THE CAMPUS AND RECONNECT THE EXISTING FIRE HYDRANTS, AND BUILDING FIRE PROTECTION SYSTEM TO THIS NEW FIRE LOOP.

41. EXISTING FIRE PROTECTION SYSTEM ENTRIES TO BE MODIFIED UNDER THIS CONTRACT AND PERMIT. FINAL DESIGN, SPECIFICATIONS AND INSTALLATION OF THE SYSTEM MODIFICATIONS IS THE RESPONSIBILITY OF THE FIRE PROTECTION CONTRACTOR AND IN ACCORDANCE WITH NFPA 13.

42. IT IS THE RESPONSIBILITY OF THE FIRE PROTECTION CONTRACTOR TO VERIFY THAT ALL FIRE PROTECTION COMPONENTS AND SYSTEMS COMPLY WITH APPLICABLE CITY, STATE, AND FEDERAL FIRE PROTECTION CODES AND AUTHORITIES.

43. SPRINKLER PIPING SHALL BE THREADED BLACK STEEL (ASTM A-53 SCHEDULE 40 OR SCHEDULE 10) WITH THREADED OR MECHANICAL COUPLINGS OR TYPE 'L' HARD DRAWN COPPER WITH FITTINGS SOLDER WITH ANSI/WSA5.8. BCuP SILVER BRAZE PER NFPA 13. HANGERS AND SUPPORTS SHALL BE IN ACCORDANCE WITH MSS-SP58, MSS-SP69, AND MSS-SP89

44. FOR OUTDOOR EQUIPMENT ON GRADE AND INDOOR FLOOR MOUNTED EQUIPMENT, THE CONTRACTOR SHALL CONSTRUCT LEVEL 3000 PSI CONCRETE(28 DAY COMPRESSIVE STRENGTH) SLABS WITH FINISHED EDGES, WIRE REINFORCED MINIMUM 6X6 W1.4/1.4 OR HEAVIER PER ASTM A185, MINIMUM 3 1/2 INCH THICK, AND MINIMUM 6 INCH LARGER ON ALL SIDES THAN THE EQUIPMENT BEING SUPPORTED. THE PAD SHALL BE HAVE 2 COATS OF EPOXY SEALANT TO SEAL THE PAD.

45. WHERE STRUCTURE IS ALTERED OR DAMAGED DURING CONSTRUCTION, INSTALLATION AND REMOVAL OF EQUIPMENT OR FIXTURES, THE CONTRACTOR SHALL REPAIR THE AREA TO MATCH SURROUNDING AREA PER SPECIFICATIONS. CUTTING, TRENCHING, AND PENETRATIONS THROUGH FIRE WALL, CONCRETE AND OTHER STRUCTURES ARE A PART OF THIS PROJECT SCOPE AND SHALL BE INCLUDED IN THE CONTRACTOR'S BID. ALL EXCAVATION AND BACKFILLING REQUIRED FOR ELECTRICAL WORK IS ALSO INCLUDED AS PART OF THIS CONTRACT AND SHALL BE INCLUDED IN CONTRACTOR'S BID.

46. FIRE ENTRY REDUCED PRESSURE BACKFLOW PREVENTER (RPZ)
   MANUFACTURERS:
   A. WILKINS/ZURN MODEL 375DA.
   B. WATTS MODEL 909.
   C. FEBCO MODEL 825.
   D. BEECO MODEL 12

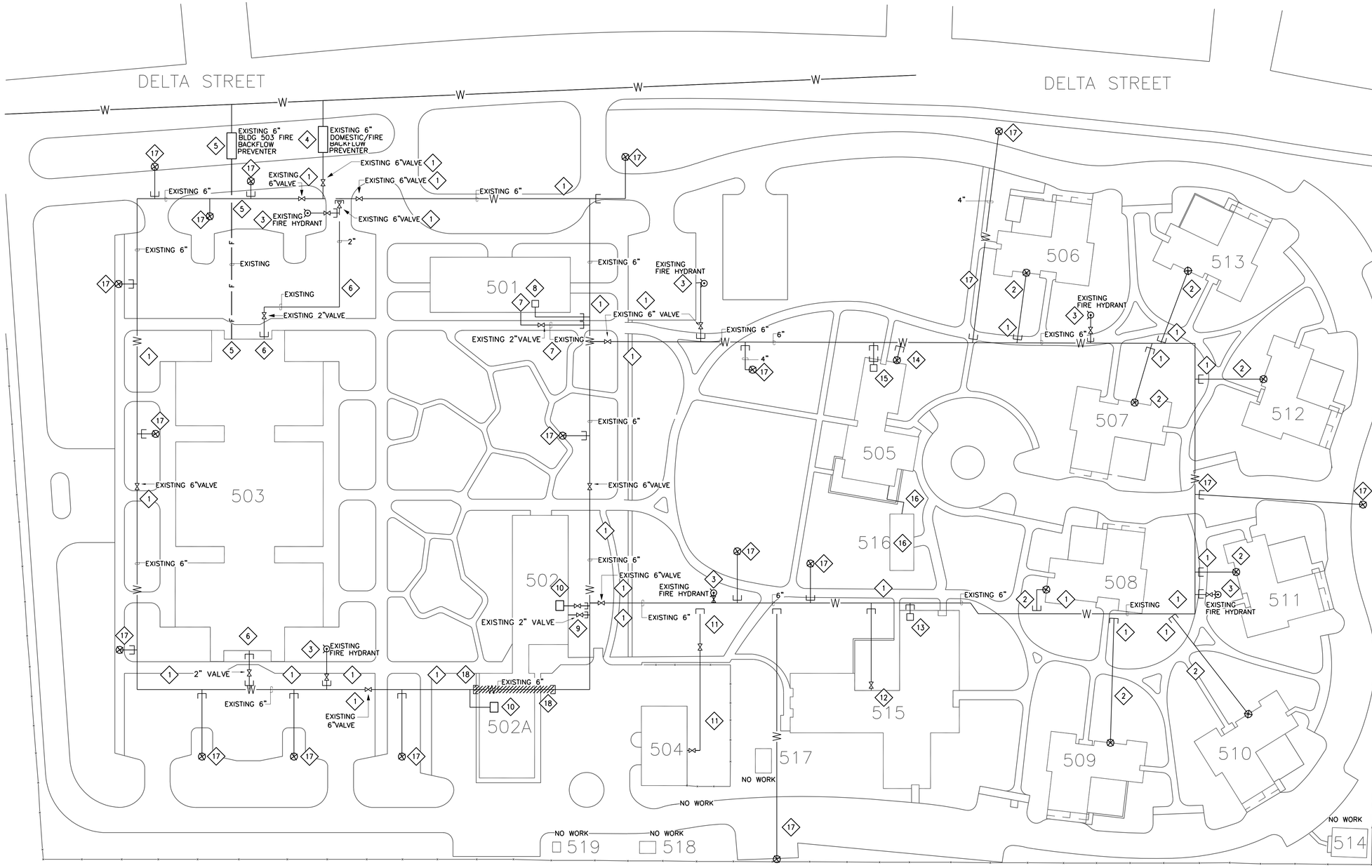

PLUMBING DEMOLITION EXISTING WATER LOOP SITE PLAN

N PLAN

1 / P-200

SCALE: 1" = 50'-0"

50 25 0 50 100

PLUMBING GENERAL NOTES:

THE INTENT OF THIS PROJECT IS TO REPLACE THE EXISTING COMBINATION SINGLE 6 INCH DOMESTIC WATER/ FIRE PROTECTION CAMPUS LOOP WITH TWO (2) NEW LOOPS; ONE 6 INCH LOOP FOR DOMESTIC WATER/IRRIGATION AND ONE 8 INCH LOOP FOR FIRE PROTECTION. DURING CONSTRUCTION THE EXISTING WATER LOOP MUST REMAIN OPERATIONAL AT ALL TIMES AND ONLY BE TAKEN OUT OF SERVICE AND ABANDONED AFTER THE OTHER TWO (2) NEW WATER LOOPS ARE OPERATIONAL.

BUILDING 514, 517, 518, AND 519 HAVE NO DOMESTIC WATER OR FIRE PROTECTION PIPING TO THE BUILDING.

PLUMBING DEMOLITION KEYED NOTES:

1. EXISTING 6-INCH COMBINATION DOMESTIC WATER/FIRE PROTECTION MAIN TO BE ABANDONED IN PLACE WHERE POSSIBLE, REMOVE WHERE REQUIRED FOR NEW DOMESTIC WATER AND FIRE PROTECTION PIPING LOOPS. EXISTING VALVE AND ASSOCIATED VALVE BOXES ARE TO BE REMOVED AND PIPE ENDS CAPPED.
2. EXISTING COTTAGE 2-INCH COMBINATION DOMESTIC WATER/FIRE PROTECTION MAIN IS TO BE MODIFIED TO BECOME THE DOMESTIC WATER MAIN FOR THE COTTAGE. REFER TO REMODEL DRAWINGS FOR FURTHER INFORMATION.
3. EXISTING FIRE HYDRANT AND ASSOCIATED ISOLATION VALVE TO REMAIN AND BE DISCONNECT FROM EXISTING DOMESTIC/FIRE LOOP AND BE CONNECTED TO NEW FIRE LOOP, REFER TO REMODEL DRAWINGS FOR FURTHER INFORMATION. COORDINATE THIS DISCONNECTION AND RECONNECTION TO MAINTAIN THE FIRE PROTECTION FOR THE CAMPUS.
4. EXISTING DOMESTIC/FIRE MAIN 6 INCH BACKFLOW PREVENTER IS TO BE MODIFIED AND REUSED AS THE DOMESTIC WATER ENTRY FOR THE CAMPUS, REFER TO REMODEL DRAWINGS FOR FURTHER INFORMATION.
5. BUILDING 503 – EXISTING 6 INCH FIRE PROTECTION BACKFLOW ENTRY AND ASSOCIATED PIPE MAIN IN TO BUILDING 503 TO REMAIN AS IS WITH NO WORK REQUIRED.
6. BUILDING 503 – 2 INCH DOMESTIC WATER ENTRY IS TO BE DISCONNECTED FROM EXISTING DOMESTIC WATER/FIRE LOOP AT THE LOOP TAP AND PREPARED FOR CONNECTION TO NEW DOMESTIC WATER LOOP, REFER TO REMODEL DRAWINGS FOR CONNECTION INFORMATION.
7. BUILDING 501 – 2 INCH DOMESTIC WATER ENTRY IS TO BE DISCONNECTED FROM EXISTING DOMESTIC WATER/FIRE LOOP AT THE LOOP TAP AND PREPARED FOR CONNECTION TO NEW DOMESTIC WATER LOOP, REFER TO REMODEL DRAWINGS FOR CONNECTION INFORMATION.
8. BUILDING 501 – 6 INCH FIRE PROTECTION WATER ENTRY IS TO BE DISCONNECTED FROM EXISTING DOMESTIC WATER/FIRE LOOP AT THE LOOP TAP AND PREPARED FOR CONNECTION TO NEW FIRE PROTECTION WATER LOOP, REFER TO REMODEL DRAWINGS FOR CONNECTION INFORMATION.
9. BUILDING 502 – 2 INCH DOMESTIC WATER ENTRY IS TO BE DISCONNECTED FROM EXISTING DOMESTIC WATER/FIRE LOOP AT THE LOOP TAP AND PREPARED FOR CONNECTION TO NEW DOMESTIC WATER LOOP, REFER TO REMODEL DRAWINGS FOR CONNECTION INFORMATION.
10. BUILDING 502 – 4 INCH FIRE PROTECTION WATER ENTRY IS TO BE DISCONNECTED FROM EXISTING DOMESTIC WATER/FIRE LOOP AT THE LOOP TAP AND PREPARED FOR CONNECTION TO NEW FIRE PROTECTION WATER LOOP, REFER TO REMODEL DRAWINGS FOR CONNECTION INFORMATION. BUILDING HAS TWO (2) INDEPENDENT FIRE SPRINKLER SYSTEMS.
11. BUILDING 504 – 3/4 INCH DOMESTIC WATER ENTRY IS TO BE DISCONNECTED FROM EXISTING DOMESTIC WATER/FIRE LOOP AT THE LOOP TAP AND PREPARED FOR CONNECTION TO NEW DOMESTIC WATER LOOP, REFER TO REMODEL DRAWINGS FOR CONNECTION INFORMATION.
12. BUILDING 515 – 2 INCH DOMESTIC WATER ENTRY IS TO BE DISCONNECTED FROM EXISTING DOMESTIC WATER/FIRE LOOP AT THE LOOP TAP AND PREPARED FOR CONNECTION TO NEW DOMESTIC WATER LOOP, REFER TO REMODEL DRAWINGS FOR CONNECTION INFORMATION.
13. BUILDING 515 – 6 INCH FIRE PROTECTION WATER ENTRY IS TO BE DISCONNECTED FROM EXISTING DOMESTIC WATER/FIRE LOOP AT THE LOOP TAP AND PREPARED FOR CONNECTION TO NEW FIRE PROTECTION WATER LOOP, REFER TO REMODEL DRAWINGS FOR CONNECTION INFORMATION.
14. BUILDING 505 – 1-1/2 INCH DOMESTIC WATER ENTRY IS TO BE DISCONNECTED FROM EXISTING DOMESTIC WATER/FIRE LOOP AT THE LOOP TAP AND PREPARED FOR CONNECTION TO NEW DOMESTIC WATER LOOP, REFER TO REMODEL DRAWINGS FOR CONNECTION INFORMATION.
15. BUILDING 505 – 6 INCH FIRE PROTECTION WATER ENTRY IS TO BE DISCONNECTED FROM EXISTING DOMESTIC WATER/FIRE LOOP AT THE LOOP TAP AND PREPARED FOR CONNECTION TO NEW FIRE PROTECTION WATER LOOP, REFER TO REMODEL DRAWINGS FOR CONNECTION INFORMATION.
16. BUILDING 516 RECEIVES ITS DOMESTIC WATER FROM BUILDING 505, SO NO WORK IS REQUIRED.
17. EXISTING IRRIGATION CONNECTION TO BE REMOVED FROM THIS LOOP AND CONNECTED TO THE NEW DOMESTIC WATER LOOP. REFER TO REMODEL DRAWINGS FOR CONNECTION INFORMATION.
18. BUILDING 502 – 6 INCH WATER MAIN UNDER THE BUILDING IS TO ABANDONED IN PLACE AND EACH END IS TO BE FILLED FOR ONE (1) FOOT WITH CONCRETE.

Rev.#	Date	Initials	Revision Description:
1	06/21/18	EMC	BUILDINGS 507, 512 REVISIONS

Designed By: EMC
Drawn By: EMC
Checked By: EMC
Scale: AS SHOWN

EMC ENGINEERS
2211 E. MISSOURI AVE., SUITE W-107
EL PASO, TEXAS, 79903
PH: 915-781-2030
FAX: 915-781-2050
TEXAS FIRM REG. #F2491
EMC PROJECT #1710051

Project: 18-117-EL PASO SSLC SITE ELECTRICAL AND WATER DISTRIBUTION REPLACEMENT

Location: 6700 DELTA DRIVE, EL PASO, TEXAS

Job Number: EMC-1710051

Date: 10-XX-18

Scale: AS SHOWN

Sheet P-200

X of: X

STATE OF TEXAS MELVIN GARY GLASS 64955 LICENSED PROFESSIONAL ENGINEER

THE SEAL APPEARING ON THIS DOCUMENT WAS AUTHORIZED BY MELVIN G. GLASS, P.E. #64955 OF EMC ENGINEERS (TEXAS FIRM REG. #F2491) ON JANUARY 8, 2017. ALTERATION OF A SEALED DOCUMENT WITHOUT PROPER NOTIFICATION TO THE RESPONSIBLE ENGINEER IS AN OFFENSE UNDER THE TEXAS ENGINEERING PRACTICE ACT.

THIS DOCUMENT, WHETHER IN HARD COPY OR MACHINE READABLE FORMAT, IS COPYRIGHTED AND AN INSTRUMENT OF SERVICES IN RESPECT TO THE PROJECT FOR WHICH IT WAS PREPARED. THIS DOCUMENT IS NOT INTENDED OR AUTHORIZED FOR REUSE BY ANY PARTY ON EXTENSIONS OF SUCH PROJECT OR ANY OTHER PROJECT. ANY REUSE, INCLUDING COPYING AND/OR MODIFYING THE DOCUMENT, WITHOUT WRITTEN PERMISSION FROM EMC ENGINEERS FOR THE SPECIFIC PURPOSE INTENDED, IS A VIOLATION OF FEDERAL COPYRIGHT LAW. UNAUTHORIZED USE OF THIS MATERIAL MAY RESULT IN CIVIL AND/OR CRIMINAL PENALTIES.
COPYRIGHT 2017 EMC ENGINEERS.

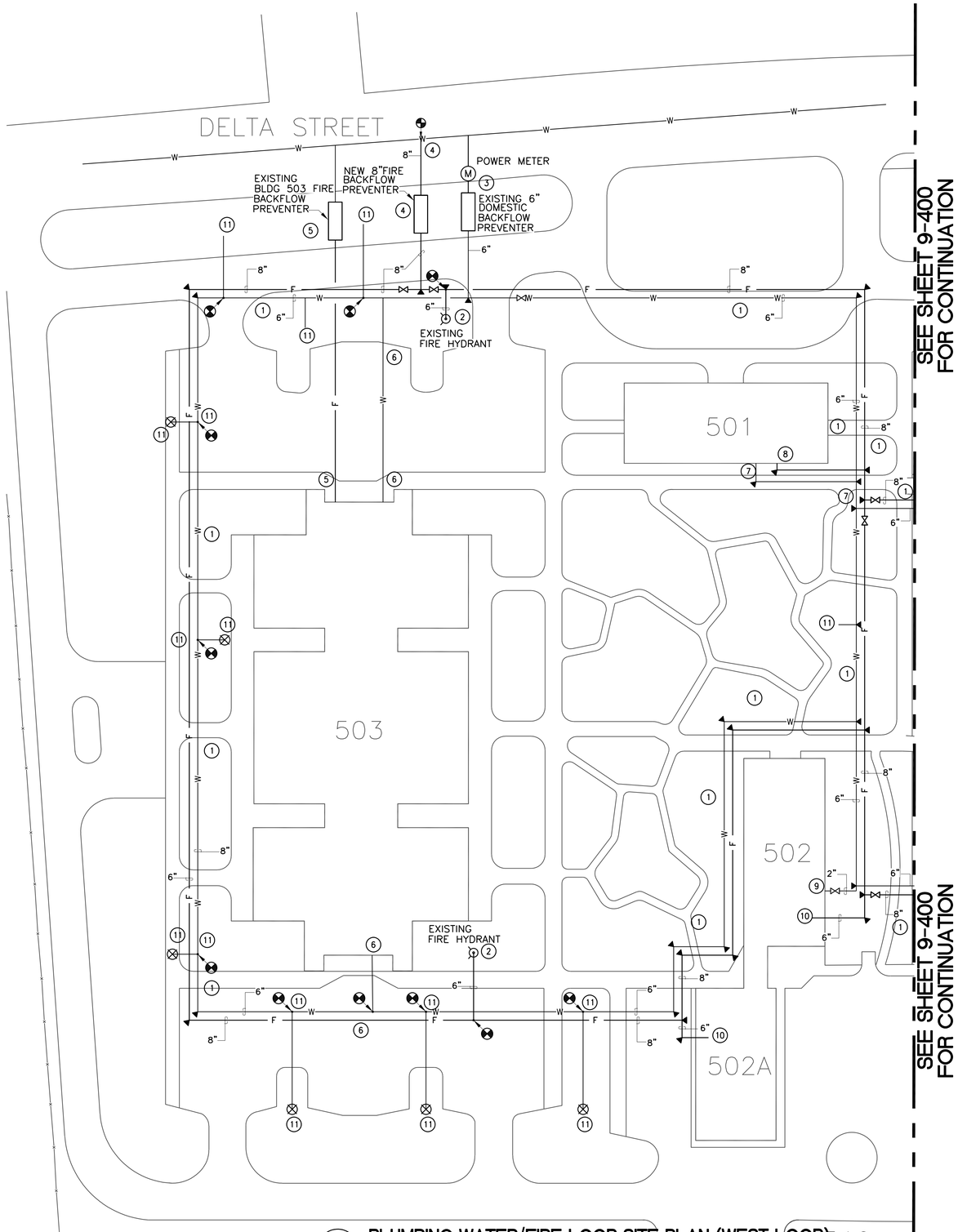

PLAN 1 P-300 PLUMBING WATER/FIRE LOOP SITE PLAN (WEST LOOP)

SCALE: 1" = 40'-0"

40 20 0 40 80

PLUMBING GENERAL NOTES:

1 THE INTENT OF THIS PROJECT IS TO REPLACE THE EXISTING 6 INCH DOMESTIC WATER/ FIRE PROTECTION CAMPUS LOOP WITH TWO (2) NEW LOOPS; ONE 6 INCH LOOP FOR DOMESTIC WATER/IRRIGATION AND ONE 8 INCH LOOP FOR FIRE PROTECTION. DURING CONSTRUCTION THE EXISTING WATER LOOP MUST REMAIN OPERATIONAL AT ALL TIMES AND ONLY BE TAKEN OUT OF SERVICE AND ABANDONED AFTER THE OTHER TWO (2) NEW LOOPS ARE OPERATIONAL. SAW CUT THE PARKING PAVEMENT F'OR THE NEW PIPING AND INSTALL NEW ASPHALT PATCHING AS REQUIRED TO RETURN THE PAVEMENT TO WORKING CONDITION. SAWCUT SIDEWALK CONCRETE OR BORE UNDER THE SIDE WALK AS REQUIRED FOR EACH SIDEWALK CROSSING.

2 BUILDING 514, 517, 518, AND 519 HAVE NO DOMESTIC WATER OR FIRE PROTECTION PIPING TO THE BUILDING.

3 THE MAIN ENTRANCE BACKFLOW PREVENTERS ARE ALL TO BE RECERTIFIED AS PART OF THIS PROJECT.

PLUMBING REMODEL KEYED NOTES:

1. NEW 6-INCH DOMESTIC WATER MAIN TO BE INSTALLED AS INDICATED ON THE DRAWINGS. NEW 8-INCH FIRE PROTECTION WATER MAIN TO BE INSTALLED AS INDICATED ON THE DRAWINGS. DOMESTIC WATER MAIN AND FIRE MAIN LOOP PIPING TO RUN IN COMMON TRENCH. CONNECT TO THE BUILDINGS AS INDICATED AND PER THE NOTES BELOW. PROVIDE THRUST BLOCKS AT EACH TURN AND AT EACH WATER TAP PER SCHEMATIC 5/P-500 FOR BOTH LOOP MAINS AS INDICATED ON THE DRAWINGS.

2. EXISTING FIRE HYDRANT AND ASSOCIATED ISOLATION VALVE TO REMAIN AND CONNECT TO NEW 8 INCH FIRE LOOP WITH 6 INCH CONNECTION. COORDINATE THIS DISCONNECTION AND RECONNECTION TO MAINTAIN THE FIRE PROTECTION FOR THE CAMPUS.

3. EXISTING DOMESTIC/FIRE 6 INCH BACKFLOW PREVENTER IS TO BE MODIFIED AND REUSED AS THE DOMESTIC WATER ENTRY FOR THE CAMPUS, INSTALL NEW CONCRETE PAD AND NEW BACKFLOW ENCLOSURE PER THE 2/MP-500 AND SPECIFICATIONS. COORDINATE WITH EL PASO WATER UTILITY FOR A NEW 6 INCH WATER METER INSTALLATION UP STREAM OF BFP, REFER TO THE ELECTRICAL DRAWINGS FOR RELOCATION OF THE TAMPER SWITCH MONITORS TO NEW FIRE BACKFLOW PREVENTER, SEE NOTE 4.

4. NEW 8 INCH FIRE PROTECTION REDUCED PRESSURE BACKFLOW PREVENTER PER SCHEMATIC 1/P-500 FOR 8 INCH FIRE PROTECTION LOOP. COORDINATE WITH EL PASO WATER UTILITY FOR A NEW 8 INCH WATER INSTALLATION TAP. REFER TO THE ELECTRICAL DRAWINGS FOR RELOCATION AND RECONNECTION OF THE TAMPER SWITCH MONITORS FROM EXISTING BACKFLOW PREVENTER , SEE NOTE 3.

5. EXISTING BUILDING 503 – 6 INCH FIRE PROTECTION BACKFLOW ENTRY AND ASSOCIATED PIPE MAIN IN TO BUILDING 503 TO REMAIN AS IS WITH NO WORK REQUIRED. PROVED NEW BACKFLOW CERTIFICATION WITH OTHER BFP.

6. BUILDING 503 – NEW 2 INCH DOMESTIC WATER ENTRY WITH ISOLATION BALL VALVE IN ENCLOSURE PER SCHEMATIC 3/P-500 FROM NEW 6 INCH DOMESTIC WATER LOOP.

7. BUILDING 501 – NEW 2 INCH DOMESTIC WATER ENTRY WITH ISOLATION BALL VALVE IN ENCLOSURE PER SCHEMATIC 3/P-500 AND 5/P-500 FROM NEW 6 INCH DOMESTIC WATER LOOP.

8. BUILDING 501 – NEW 6 INCH FIRE PROTECTION WATER PIPING TO EXISTING ENTRY FROM NEW 8 INCH FIRE LOOP WITH NO ISOLATION VALVE AT TAP PER SCHEMATIC 4/P-500 AND 5/P-500.

9. BUILDING 502 AND 502A – NEW 2 INCH DOMESTIC WATER ENTRY WITH ISOLATION BALL VALVE IN ENCLOSURE PER SCHEMATIC 3/P-500 AND 5/P-500 FROM NEW 6 INCH DOMESTIC WATER LOOP.

10. BUILDING 502 AND 502A –TWO (2) NEW 6 INCH FIRE PROTECTION WATER PIPING TO EXISTING ENTRIES FROM NEW 8 INCH FIRE LOOP WITH NO ISOLATION VALVE AT TAP PER SCHEMATIC 4/P-500 AND 5/P-500.

11. EXISTING IRRIGATION CONNECTION (SIZE INDICATED) TO BE CONNECTED TO THE NEW 6 INCH DOMESTIC WATER LOOP WITH ISOLATION BALL VALVE MATCHING SIZE OF EXISTING PIPING (MINIMUM1-1/ 2 INCH).

STATE OF TEXAS
MELVIN GARY GLASS
64955
LICENSED
PROFESSIONAL ENGINEER
01/01/19

THE SEAL APPEARING ON THIS DOCUMENT WAS AUTHORIZED BY MELVIN G. GLASS, P.E. #64955 OF EMC ENGINEERS (TEXAS FIRM REG. #F2491) ON JANUARY 1, 2019. ALTERATION OF A SEALED DOCUMENT WITHOUT PROPER NOTIFICATION TO THE RESPONSIBLE ENGINEER IS AN OFFENSE UNDER THE TEXAS ENGINEERING PRACTICE ACT.

Rev.#	Date	Initials	Revision Description:
1	06/21/18	EMC	BUILDINGS 507, 512 REVISIONS

Designed By: EMC
Drawn By: EMC
Checked By: EMC
Scale: AS SHOWN

EMC ENGINEERS
2211 E. MISSOURI AVE., SUITE W-107
EL PASO, TEXAS, 79903
PH: 915-781-2030
FAX: 915-781-2045
TEXAS FIRM REG. #F2491
EMC PROJECT #1710051

Project: 18-117-EL PASO SSLC SITE ELECTRICAL AND WATER DISTRIBUTION REPLACEMENT

Location: 6700 DELTA DRIVE, EL PASO, TEXAS

Job Number: EMC-1710051

Date: 10-XX-18

Scale: AS SHOWN

Sheet P-300

X of: X

THIS DOCUMENT, WHETHER IN HARD COPY OR MACHINE READABLE FORMAT, IS COPYRIGHTED AND AN INSTRUMENT OF SERVICES IN RESPECT TO THE PROJECT FOR WHICH IT WAS PREPARED. THIS DOCUMENT IS NOT INTENDED OR AUTHORIZED FOR REUSE BY ANY PARTY ON EXTENSIONS OF SUCH PROJECT OR ANY OTHER PROJECT. ANY REUSE, INCLUDING COPYING AND/OR MODIFYING THE DOCUMENT, WITHOUT WRITTEN PERMISSION FROM EMC ENGINEERS FOR THE SPECIFIC PURPOSE INTENDED, IS A VIOLATION OF FEDERAL COPYRIGHT LAW. UNAUTHORIZED USE OF THIS MATERIAL MAY RESULT IN CIVIL AND/OR CRIMINAL PENALTIES.

COPYRIGHT 2017 EMC ENGINEERS.

N PLAN

1 / P-400 PLUMBING WATER/FIRE LOOP SITE PLAN (EAST LOOP)

SCALE: 1" = 40'-0"

40 20 0 40 80

PLUMBING GENERAL NOTES:

PLUMBING REMODEL GENERAL NOTES

1 THE INTENT OF THIS PROJECT IS TO REPLACE THE EXISTING 6 INCH DOMESTIC WATER/ FIRE PROTECTION CAMPUS LOOP WITH TWO (2) NEW LOOPS; ONE 6 INCH LOOP FOR DOMESTIC WATER/IRRIGATION AND ONE 8 INCH LOOP FOR FIRE PROTECTION. DURING CONSTRUCTION THE EXISTING WATER LOOP MUST REMAIN OPERATIONAL AT ALL TIMES AND ONLY BE TAKEN OUT OF SERVICE AND ABANDONED AFTER THE OTHER TWO (2) NEW LOOPS ARE OPERATIONAL. SAW CUT THE PARKING PAVEMENT F'OR THE NEW PIPING AND INSTALL NEW ASPHALT PATCHING AS REQUIRED TO RETURN THE PAVEMENT TO WORKING CONDITION. SAWCUT SIDEWALK CONCRETE OR BORE UNDER THE SIDE WALK AS REQUIRED FOR EACH SIDEWALK CROSSING.

2 BUILDING 514, 517, 518, AND 519 HAVE NO DOMESTIC WATER OR FIRE PROTECTION PIPING TO THE BUILDING.

PLUMBING REMODEL KEYED NOTES: (#)

(1) NEW 6-INCH DOMESTIC WATER MAIN TO BE INSTALLED AS INDICATED ON THE DRAWINGS. NEW 8-INCH FIRE PROTECTION WATER MAIN TO BE INSTALLED AS INDICATED ON THE DRAWINGS. DOMESTIC WATER MAIN AND FIRE MAIN LOOP PIPING TO RUN IN COMMON TRENCH. CONNECT TO THE BUILDINGS AS INDICATED AND PER THE NOTES BELOW. PROVIDE THRUST BLOCKS AT EACH TURN AND AT EACH WATER TAP PER SCHEMATIC 5/P-500 FOR BOTH LOOP MAINS AS INDICATED ON THE DRAWINGS.

(2) EXISTING FIRE HYDRANT AND ASSOCIATED ISOLATION VALVE TO REMAIN AND CONNECT TO NEW 8 INCH FIRE LOOP WITH 6 INCH CONNECTION. COORDINATE THIS DISCONNECTION AND RECONNECTION TO MAINTAIN THE FIRE PROTECTION FOR THE CAMPUS.

(3) CONTRACTOR TO SAW CUT AND REPAIR SIDE WALKS AND ROADWAY AS REQUIRED TO THE LOOP ROUTING SHOWN.

(4) EXISTING COTTAGE BURIED 2-INCH COMBINATION DOMESTIC WATER/FIRE PROTECTION MAIN IS TO BECOME THE 2 INCH NEW DOMESTIC WATER MAIN FOR THE COTTAGE. PROVIDE AND CONNECT NEW 2 INCH DOMESTIC WATER ENTRY TAP WITH ISOLATION BALL VALVE IN ENCLOSURE PER SCHEMATIC 3/P-500 AND 5/P-500 FROM NEW 6 INCH DOMESTIC WATER LOOP.

(5) NEW COTTAGE 3 INCH FIRE PROTECTION WATER PIPING TO NEW 8 INCH FIRE LOOP WITH NO ISOLATION VALVE AT TAP PER SCHEMATIC 4/P-500 AND 5/P-500. ROUTE PIPING AS INDICATED AND COME UP IN COTTAGE MECHANICAL ROOM PER SCHEMATIC 6/P-500.

(6) BUILDING 505 - NEW 2 INCH DOMESTIC WATER ENTRY WITH ISOLATION BALL VALVE IN ENCLOSURE PER SCHEMATIC 3/P-500 AND 5/P-500 FROM NEW 6 INCH DOMESTIC WATER LOOP.

(7) BUILDING 505 - NEW 4 INCH FIRE PROTECTION WATER PIPING TO EXISTING ENTRY FROM NEW 8 INCH FIRE LOOP WITH NO ISOLATION VALVE AT TAP PER SCHEMATIC 4/P-500 AND 5/P-500.

(8) BUILDING 515 - NEW 2 INCH DOMESTIC WATER ENTRY WITH ISOLATION BALL VALVE IN ENCLOSURE PER SCHEMATIC 3/P-500 AND 5/P-500 FROM NEW 6 INCH DOMESTIC WATER LOOP.

(9) BUILDING 515 -NEW 6 INCH FIRE PROTECTION WATER PIPING TO EXISTING ENTRY FROM NEW 8 INCH FIRE LOOP WITH NO ISOLATION VALVE AT TAP PER SCHEMATIC 4/P-500 AND 5/P-500.

(10) BUILDING 516 RECEIVES ITS DOMESTIC WATER FROM BUILDING 505 SO NO WORK IS REQUIRED.

(11) BUILDING 504 - NEW 3/4 INCH DOMESTIC WATER ENTRY WITH ISOLATION BALL VALVE IN ENCLOSURE PER SCHEMATIC 3/P-500 AND 5/P-500 FROM NEW 6 INCH DOMESTIC WATER LOOP.

(12) EXISTING IRRIGATION CONNECTION (SIZE INDICATED) TO BE CONNECTED TO THE NEW 6 INCH DOMESTIC WATER LOOP WITH ISOLATION BALL VALVE MATCHING SIZE OF EXISTING PIPING (MINIMUM1-1/ 2 INCH).

Rev. #	Date	Initials	Revision Description:
1	06/21/18	EMC	BUILDINGS 507, 512 REVISIONS

Designed By: EMC
Drawn By: EMC
Checked By: EMC
Scale: AS SHOWN

EMC ENGINEERS
2211 E. MISSOURI AVE., SUITE W-107
EL PASO, TEXAS, 79903
PH: 915-781-2030
FAX: 915-781-2043
TEXAS FIRM REG. #F2491
EMC PROJECT #1710051

Project: 18-117-EL PASO SSLC SITE ELECTRICAL AND WATER DISTRIBUTION REPLACEMENT

Location: 6700 DELTA DRIVE, EL PASO, TEXAS

Job Number: EMC-1710051

Date: 10-XX-18

Scale: AS SHOWN

Sheet P-400

X of: X

STATE OF TEXAS MELVIN GARY GLASS 64955 LICENSED PROFESSIONAL ENGINEER

THE SEAL APPEARING ON THIS DOCUMENT WAS AUTHORIZED BY MELVIN G. GLASS, P.E. #64955 OF EMC ENGINEERS (TEXAS FIRM REG. #F2491) ON JANUARY 8, 2017. ALTERATION OF A SEALED DOCUMENT WITHOUT PROPER NOTIFICATION TO THE RESPONSIBLE ENGINEER IS AN OFFENSE UNDER THE TEXAS ENGINEERING PRACTICE ACT.

THIS DOCUMENT, WHETHER IN HARD COPY OR MACHINE READABLE FORMAT, IS COPYRIGHTED AND AN INSTRUMENT OF SERVICES IN RESPECT TO THE PROJECT FOR WHICH IT WAS PREPARED. THIS DOCUMENT IS NOT INTENDED OR AUTHORIZED FOR REUSE BY ANY PARTY ON EXTENSIONS OF SUCH PROJECT OR ANY OTHER PROJECT. ANY REUSE, INCLUDING COPYING AND/OR MODIFYING THE DOCUMENT, WITHOUT WRITTEN PERMISSION FROM EMC ENGINEERS FOR THE SPECIFIC PURPOSE INTENDED, IS A VIOLATION OF FEDERAL COPYRIGHT LAW. UNAUTHORIZED USE OF THIS MATERIAL MAY RESULT IN CIVIL AND/OR CRIMINAL PENALTIES.
COPYRIGHT 2017 EMC ENGINEERS.

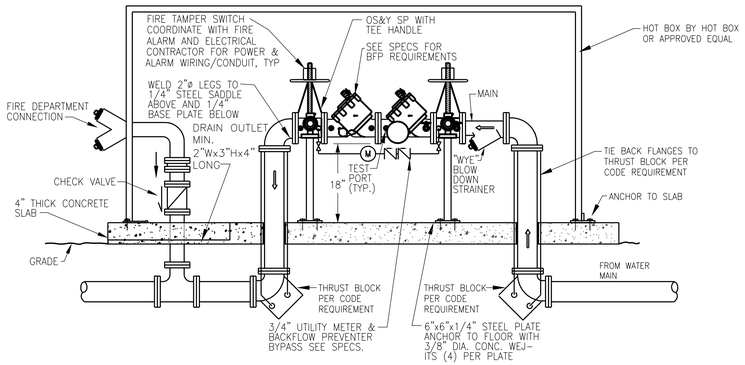

1 P-500 REDUCED PRESSURE BACKFLOW PREVENTER SCHEMATIC (FIRE PROTECTION)

SCALE: NONE

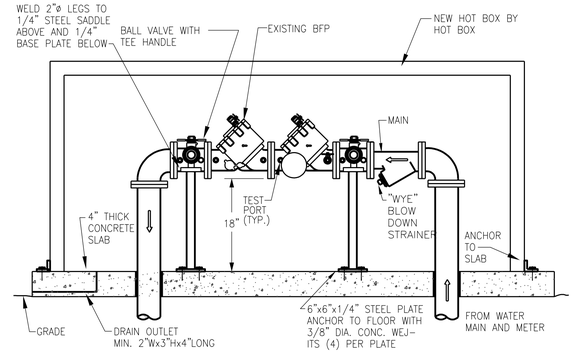

2 P-500 REDUCED PRESSURE BACKFLOW PREVENTER SCHEMATIC

SCALE: NONE

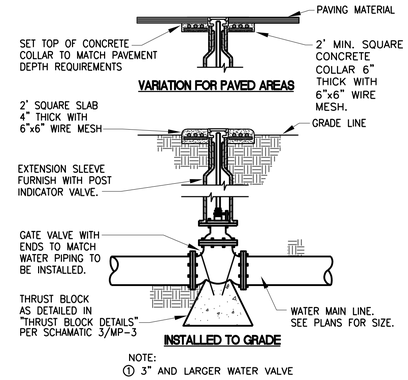

3 P-500 WATER VALVE AND VALVE BOX SCHEMATIC

SCALE: NONE — FIRE AND DOMESTIC WATER

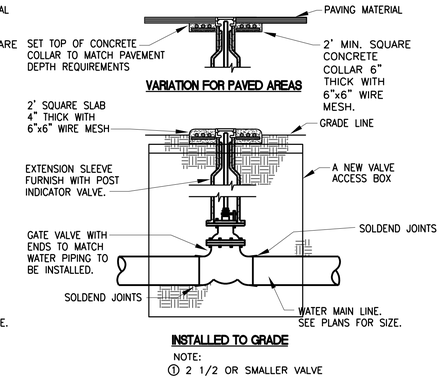

4 P-500 WATER VALVE AND VALVE BOX SCHEMATIC

SCALE: NONE — FOR DOMESTIC WATER

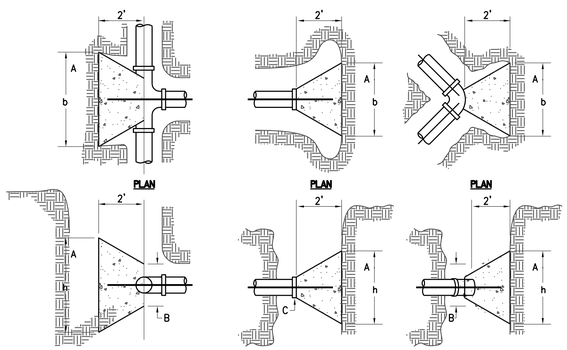

PIPE SIZE	ELBOW ANGLE	ELBOW (b) DIM.	ELBOW (h) DIM.	TEE OR PLUG (h)	TEE OR PLUG (b)
4"	–	–	–	2'	2'
4"	90',45'	2'	2'	–	–
4"	22-1/2',11-1/4'	2'	2'	–	–
6"	–	–	–	2'	2'
6"	90',45'	2'	2'	–	–
6"	22-1/2',11-1/4'	2'	2'	–	–
8"	90'	–	–	3'	3'
8"	90'	3'	3'	–	–
8"	45'	2'	2'	–	–
8"	22-1/2',11-1/4'	2'	2'	–	–
10"	–	–	–	3'	3'
10"	90'	3'-6"	–	–	–
10"	45'	3'	3'	–	–
10"	22-1/2',11-1/4'	2'	2'	–	–
12"	–	–	–	3'-6"	3'-6"
12"	90'	4"	4"	–	–
12"	45'	3'-6"	3'-6"	–	–
12"	22-1/2',11-1/4'	2'	2'	–	–
14"	–	–	–	4'	4'
14"	90'	3'	3'	–	–
14"	45'	3'-6"	3'-6"	–	–
14"	22-1/2',11-1/4'	3'	3'	–	–

NOTE:
1. SEE SPECIFICATIONS FOR ADDITIONAL INFORMATION.

CONSTRUCTION NOTES:
A. UNDISTURBED EARTH
B. O.D. OF PIPE +8"
C. O.D. OF CAP OR PLUG, MIN. 12"x12"

5 P-500 CONCRETE THRUST BLOCKING SCHEMATIC

SCALE: NONE

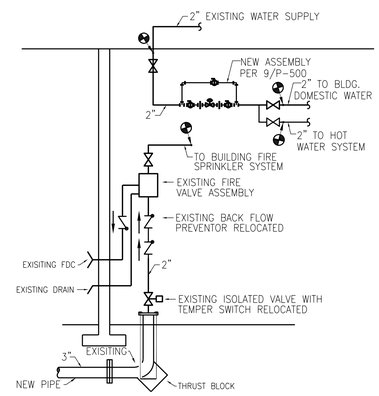

6 P-500 FIRE ENTRY SCHEMATIC

SCALE: NONE — COTTAGES ⊕-

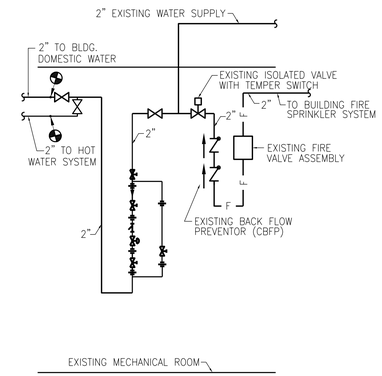

7 P-600 EXISTING WATER FIRE ENTRY SCHEMATIC

SCALE: NONE — COTTAGES ⊕-

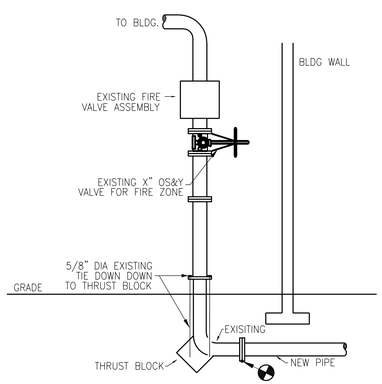

8 P-500 FIRE ENTRY SCHEMATIC

SCALE: NONE — BUILDINGS ⊕-

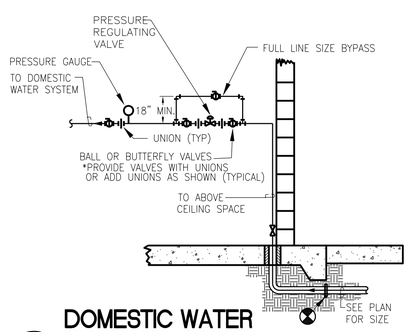

9 P-500 DOMESTIC WATER ENTRANCE SCHEMATIC

SCALE: NONE — BUILDINGS ⊕-

THIS DOCUMENT, WHETHER IN HARD COPY OR MACHINE READABLE FORMAT, IS COPYRIGHTED AND AN INSTRUMENT OF SERVICES IN RESPECT TO THE PROJECT FOR WHICH IT WAS PREPARED. THIS DOCUMENT IS NOT INTENDED OR AUTHORIZED FOR REUSE BY ANY PARTY ON EXTENSIONS OF SUCH PROJECT OR ANY OTHER PROJECT. ANY REUSE, INCLUDING COPYING AND/OR MODIFYING THE DOCUMENT, WITHOUT WRITTEN PERMISSION FROM EMC ENGINEERS FOR THE SPECIFIC PURPOSE INTENDED, IS A VIOLATION OF FEDERAL COPYRIGHT LAW. UNAUTHORIZED USE OF THIS MATERIAL MAY RESULT IN CIVIL AND/OR CRIMINAL PENALTIES.
COPYRIGHT 2017 EMC ENGINEERS.

THE SEAL APPEARING ON THIS DOCUMENT WAS AUTHORIZED BY MELVIN G. GLASS, P.E. #64955 OF EMC ENGINEERS (TEXAS FIRM REG. #F2491) ON JANUARY 1, 2018. ALTERATION OF A SEALED DOCUMENT WITHOUT PROPER NOTIFICATION TO THE RESPONSIBLE ENGINEER IS AN OFFENSE UNDER THE TEXAS ENGINEERING PRACTICE ACT.

EMC ENGINEERS
2211 E. MISSOURI AVE., SUITE W-107
EL PASO, TEXAS, 79903
PH: 915-781-2030
FAX: 915-781-2043
TEXAS FIRM REG. #F2491
EMC PROJECT #1710051
EMC ENGINEERS

Rev. #	Date	Initials	Revision Description:
1	06/21/18	EMC	BUILDINGS 507, 512 REVISIONS

Designed By: EMC
Drawn By: EMC
Checked By: EMC
Scale: AS SHOWN

Project: 18-117-EL PASO SSLC SITE ELECTRICAL AND WATER DISTRIBUTION REPLACEMENT
Location: 6700 DELTA DRIVE, EL PASO, TEXAS

Job Number: EMC-1710051
Date: 10-XX-18
Scale: AS SHOWN
Sheet P-500
X of: X

ELECTRICAL GENERAL NOTES:

GENERAL

1. THESE ELECTRICAL GENERAL NOTES ARE APPLICABLE TO ALL ELECTRICAL SHEETS IN THIS PROJECT SET.

2. THE ELECTRICAL WORK SHALL BE PERFORMED IN STRICT ACCORDANCE WITH THE APPLICABLE AND ADOPTED PROVISIONS OF THE FOLLOWING CODES:
   - 2014 NATIONAL ELECTRICAL CODE
   - 2015 INTERNATIONAL BUILDING CODE
   - 2015 INTERNATIONAL PLUMBING CODE
   - 2015 INTERNATIONAL MECHANICAL CODE
   - 2015 INTERNATIONAL FIRE CODE
   - 2015 INTERNATIONAL FUEL CODE
   - 2015 INTERNATIONAL ENERGY CONSERVATION CODE

   AS ADOPTED AND INTERPRETED BY THE STATE OF TEXAS, TEXAS HEALTH AND HUMAN SERVICES COMMISSION STANDARDS AND GUIDELINES, AND THE NATIONAL FIRE PROTECTION ASSOCIATION (NFPA) REGULATIONS, CURRENT ADOPTED EDITION REGARDING MECHANICAL SYSTEMS, FIRE PROTECTION AND ALARM SYSTEMS AND ASSOCIATED PLUMBING AND ELECTRICAL SYSTEMS. ALL LABOR AND MATERIALS NECESSARY TO COMPLY WITH RULES, REGULATIONS AND ORDINANCES SHALL BE PROVIDED. WHERE THE DRAWINGS INDICATE MATERIALS OR CONSTRUCTION IN EXCESS OF CODE REQUIREMENTS, THE DRAWINGS SHALL GOVERN. THE CONTRACTOR SHALL HOLD AND SAVE THE OWNER AND ENGINEER FREE AND HARMLESS FROM LIABILITY OF ANY NATURE OR KIND ARISING FROM HIS FAILURE TO COMPLY WITH ALL APPLICABLE CODES AND ORDINANCES.

3. THE CONTRACTOR SHALL COORDINATE WITH OWNER, ARCHITECT, AND ENGINEER ANY WORK THAT HAS THE POTENTIAL TO HINDER ELECTRICAL SERVICES TO AREAS OUTSIDE OF THIS CONTRACT. ALL SHUT-DOWNS OR TIE-INS RELATING TO THESE SYSTEMS SHALL BE SCHEDULED AND SUBMITTED IN WRITING TO BE APPROVED BY THE OWNER'S FACILITY MANAGEMENT, OWNER, ARCHITECT, OR ENGINEER. CONTRACTOR SHALL SUBMIT IN WRITING A SCHEDULE FOR PHASING OF CONSTRUCTION THAT INDICATES AREAS OF FIRST PRIORITY DURING EACH PHASE AND ANTICIPATED COMPLETION TIMES. SCHEDULES SHALL BE SUBMITTED A MINIMUM OF ONE WEEK PRIOR TO COMMENCING WORK. FACILITY MANAGEMENT, OWNER, ARCHITECT OR ENGINEER SHALL REVIEW THESE SCHEDULES AND NOTIFY CONTRACTOR OF ACCEPTANCE PRIOR TO COMMENCEMENT OF WORK.

4. ALL MATERIALS AND LABOR NECESSARY TO COMPLY WITH CODES AND RULES, REGULATIONS AND ORDINANCES SHALL BE PROVIDED. WHERE THE DRAWINGS AND/OR SPECIFICATIONS INDICATE MATERIALS OR CONSTRUCTION IN EXCESS OF CODE REQUIREMENTS, THE DRAWINGS AND/OR SPECIFICATIONS SHALL GOVERN. THE CONTRACTOR SHALL HOLD AND SAVE THE OWNER, ARCHITECT AND ENGINEERS FREE AND HARMLESS FROM LIABILITY OF ANY NATURE OR KIND ARISING FROM HIS FAILURE TO COMPLY WITH ALL APPLICABLE CODES AND ORDINANCES.

5. Not Used

6. BEFORE YOU DIG ALL EXISTING UTILITIES, I.E. WATER, SEWER, GAS, FIRE LINE, ELECTRICITY, CABLE, TELEPHONE, IRRIGATION LINES, SHALL BE LOCATED AND CLEARLY MARKED IN ORDER TO AVOID UNNECESSARY SHUT DOWNS AND EMERGENCY.

7. EACH CONTRACTOR SHALL GIVE ALL REQUISITE NOTICES AND FILLED OUT APPLICATIONS, OBTAIN AND PAY FOR ALL PERMITS, DEPOSITS AND FEES (INCLUDING UTILITY CONNECTIONS FEES, ANY UTILITY EXTENSION FEES, TAP FEES, DEVELOPMENT FEES, AND IMPACT FEES) NECESSARY FOR THE INSTALLATION OF WORK UNDER THESE NOTES. TWO (2) COPIES OF CERTIFICATES OF APPROVAL SHALL BE OBTAINED FROM ALL AUTHORITIES ISSUING SAME AND SHALL BE TURNED OVER TO OWNER, ARCHITECT, ENGINEER PRIOR TO FINAL ACCEPTANCE OF THE WORK.

8. REQUIRED INSURANCE SHALL BE PROVIDED BY THIS CONTRACTOR FOR PROTECTION AGAINST PUBLIC LIABILITY AND PROPERTY DAMAGE FOR THE DURATION OF WORK. CONTRACTOR SHALL SECURE AND PAY ALL PERMITS, FEES, INSPECTIONS, AND TESTS UNLESS OTHERWISE INDICATED. COORDINATE WITH ARCHITECT, ENGINEER OR OWNER. SUBSTITUTIONS REQUESTED BY THE CONTRACTOR SHALL BE PAID FOR BY THE CONTRACTOR.

9. ALL WORK SHALL CONFORM WITH FEDERAL, STATE, AND LOCAL CODES, RULES, AND REGULATIONS. ALL WORK SHALL BE PERFORMED BY A LICENSED CONTRACTOR IN A FIRST CLASS WORKMANLIKE MANNER. THE SYSTEMS SHALL BE INSTALLED COMPLETE AND FULLY OPERATIVE UNLESS OTHERWISE INDICATED.

10. CONTRACTOR SHALL FIELD VERIFY EXISTING CONDITIONS AND PROVIDE A WRITTEN REPORT TO THE ARCHITECT AND THE ENGINEERING OFFICES. THIS REPORT SHALL DESCRIBE EXISTING DAMAGE OR OTHER CONDITIONS THAT MAY INTERFERE WITH THIS PROPOSED NEW WORK. THIS SITE SURVEY SHALL ALSO INCLUDE VERIFICATION OF SIZES, LOCATIONS, AND CONDITIONS OF EXISTING UTILITIES. QUESTIONS REGARDING THESE DRAWINGS SHALL BE ADDRESSED TO THE ENGINEER PRIOR TO THE AWARDING OF THE CONTRACT. OTHERWISE THE ENGINEER'S INTERPRETATION OF THE MEANING AND INTENT OF THE DRAWINGS SHALL BE FINAL.

11. DURING CONSTRUCTION IF THE CONTRACTOR ENCOUNTER AND DAMAGES THE EXISTING UNDERGROUND INFRASTRUCTURE THE CONTRACTOR SHALL REPAIR THE INFRASTRUCTURE AT NO ADDITIONAL COST TO THE OWNER. WHERE STRUCTURE IS ALTERED OR DAMAGED DURING CONSTRUCTION, INSTALLATION AND REMOVAL OF EQUIPMENT OR FIXTURES, THE CONTRACTOR SHALL REPAIR THE AREA TO MATCH SURROUNDING AREA PER ARCHITECTURAL SPECIFICATIONS. CUTTING, TRENCHING, AND PENETRATIONS THROUGH FIRE WALL, CONCRETE AND OTHER STRUCTURES ARE A PART OF THIS PROJECT SCOPE AND SHALL BE INCLUDED IN THE CONTRACTOR'S BID. ALL EXCAVATION AND BACKFILLING REQUIRED FOR PLUMBING WORK IS ALSO INCLUDED AS PART OF THIS CONTRACT AND SHALL BE INCLUDED IN CONTRACTOR'S BID.

12. ALL SYSTEMS AND COMPONENTS SHALL BE APPROVED FOR THE PURPOSE FOR WHICH INSTALLED. ALL EQUIPMENT AND MATERIALS SHALL BE NEW AND FROM ESTABLISHED AMERICAN SUPPLIERS UNLESS OTHERWISE INDICATED.

13. ALL EQUIPMENT PARAMETERS SHOWN ARE FOR PERFORMANCE AT SITE ALTITUDE. SUPPLIERS SHALL SELECT AND DEMONSTRATE THAT THEIR EQUIPMENT MEETS THE DESIGN CONDITIONS AT SITE ALTITUDE.

14. ELECTRICAL CONTRACTOR SHALL COORDINATE WITH MECHANICAL/ PLUMBING CONTRACTOR THE MECHANICAL/ PLUMBING EQUIPMENT'S ELECTRICAL REQUIREMENTS, INCLUDING POWER, CONTROL, COMMUNICATION, AND MONITORING, OF EACH DEVICE PROVIDED AND/OR INSTALLED BY MECHANICAL/PLUMBING CONTRACTOR.

15. SUPPORT SYSTEM FOR EQUIPMENT SUPPORTED BY THE BUILDING STRUCTURE SHALL BE SUBMITTED TO THE STRUCTURAL ENGINEER VIA ARCHITECT FOR APPROVAL PRIOR TO PURCHASE AND INSTALLATION. NO WIRE OR PERFORATED STRAP WILL BE PERMITTED FOR ANY HANGER OR SUPPORT.

16. THE CONTRACTOR SHALL NOT SCALE THE CONTRACT DOCUMENTS. THE CONTRACT DOCUMENTS ARE DIAGRAMMATIC IN NATURE AND DO NOT COMPLETELY DEPICT ALL EXISTING CONDITIONS IN THE AREA.

17. IT SHALL BE THE CONTRACTOR'S RESPONSIBILITY TO LOOK THROUGH ALL DRAWINGS ASSOCIATED WITH THIS PROJECT. WORK ASSOCIATED WITH THE ELECTRICAL CONTRACTOR'S TRADE MAY BE SHOWN ON OTHER DRAWINGS. ANY ADDITIONAL COSTS RESULTING FROM THE FAILURE TO INCLUDE THESE ITEMS SHOWN ON OTHER DRAWINGS WILL BE INCURRED BY THE CONTRACTOR. SHOULD THE CONTRACTOR ENCOUNTER ANY DISCREPANCIES OR INCONSISTENCIES IN THE CONSTRUCTION DOCUMENTS, THE MORE STRINGENT SHALL GOVERN.

18. CONTRACTOR SHALL FIELD VERIFY CONDITION OF EXISTING EQUIPMENT AND PROVIDE NECESSARY COMPONENTS TO ASSEMBLE AND TO START-UP COMPLETE AND FULLY OPERATIONAL SYSTEMS.

19. POSITIONING OF NEW LAY-IN FIXTURES TAKES PRECEDENCE OVER ARCHITECTURAL REFLECTED CEILING PLAN AND MECHANICAL DIFFUSERS PRIOR TO INSTALLATION OF FIXTURES. CONTRACTOR SHALL COORDINATE ACTUAL LOCATIONS OF LIGHTS WITH AIR DEVICES AND DUCTWORK, CEILING PANELS, JOIST SPACING AND ARCHITECTURAL REFLECTED CEILING PLAN (REF. MECHANICAL PLANS AND ARCHITECTURAL PLANS).

20. PROVIDE OWNER WITH THREE (3) COPIES OF ALL INSTALLATIONS INSTRUCTIONS, PRODUCT DATA SUBMITTAL INFORMATION, WARRANTIES, CONTACT INFORMATION DURING WARRANTY PERIOD AND BALANCING REPORTS IN 3-RING BINDERS AND CD VERSION.

21. FOR OUTDOOR EQUIPMENT ON GRADE AND INDOOR FLOOR MOUNTED EQUIPMENT, THE CONTRACTOR SHALL CONSTRUCT LEVEL 3000 PSI CONCRETE(28 DAY COMPRESSIVE STRENGTH) SLABS WITH FINISHED EDGES, WIRE REINFORCED MINIMUM 6X6 W1.4/1.4 OR HEAVIER PER ASTM A185, MINIMUM 3 1/2" THICK, AND MINIMUM 6" LARGER ON ALL SIDES THAN THE EQUIPMENT BEING SUPPORTED. THE PAD SHALL BE HAVE 2 COATS OF EPOXY SEALANT TO SEAL THE PAD.

22. CONTRACTOR SHALL MAKE NO PENETRATIONS WHATSOEVER OF WALLS FORMING PART OF A STAIRWELL, AN EXIT PASSAGEWAY, OR OTHER TWO-HOUR RATED WALLS. ALL CONDUITS SHALL RUN PARALLEL TO WALLS.

23. CONTRACTOR SHALL SAW CUT AND PATCH ASPHALT, CONCRETE OR OTHER MATERIAL ENCOUNTERED AS REQUIRED TO INSTALL NEW UNDERGROUND RACEWAY. REFER TO ARCHITECTURAL SPECIFICATIONS REGARDING PATCHING REQUIREMENTS.

24. CONTRACTOR SHALL PROVIDE AND INSTALL IDENTIFICATION TAGS FOR EQUIPMENT AND CONDUITS PER ASME 13.1 SCHEME OF IDENTIFICATION FOR PIPING. BURIED ELECTRICAL CONDUITS SHALL BE MARKED PER CODE REQUIREMENTS WITH UNDERGROUND WARNING TAPE 3" BELOW FINISHED GRADE. TAPE SHALL BE 4" WIDE COLORED RED WITH SUITABLE WARNING LEGEND PER ASME A13.1 SCHEME OF IDENTIFICATION FOR PIPING.

25. CONTRACTOR SHALL TAKE PRECAUTIONS PER THE ARCHITECT'S INSTRUCTIONS TO PROTECT EXISTING TREES AND /OR OTHER SITE VEGETATION.

26. THE ELECTRICAL CONTRACTOR SHALL PROVIDE AND HAVE INSTALLED ANY ACCESS DOOR REQUIRED TO ACCESS NEW AND EXISTING ELECTRICAL EQUIPMENT THAT REQUIRES ACCESS BEHIND GYPBOARD OR HARD CEILINGS AND IN WALLS. THE ELECTRICAL CONTRACTOR SHALL PROVIDE THE GENERAL CONTRACTOR WITH THESE ACCESS DOORS FOR INSTALLATION IN THE CEILING OR WALL. ACCESS DOORS SHALL BE RATED FOR THE WALL, FLOOR, OR CEILING TYPE AND SHALL BE A MINIMUM SIZE OF 12"X12" OR SIZED AS INDICATED ON THE DRAWINGS.

27. ALL ELECTRICAL CONDUIT AND BOX OPENINGS SHALL BE CAPPED DURING DEMOLITION AND CONSTRUCTION.

28. SITE VISIT REPORTS:
DURING THE COURSE OF THE JOB, THE ENGINEER WILL MAKE SITE AND INSPECTION VISITS TO OBSERVE WORK IN PROGRESS AND WILL SUBSEQUENTLY PREPARE A WRITTEN SITE VISIT REPORT, WHICH WILL BE SENT TO THE CONTRACTOR AND TO WHOMEVER ELSE THE ENGINEER DESIRES. THE CONTRACTOR SHALL PROVIDE 48 HOUR WRITTEN NOTICE TO THE ENGINEER FOR ALL TESTING AND CITY INSPECTION SO THEY CAN ATTEND THESE INSPECTIONS. THE CONTRACTOR SHALL PREPARE A WRITTEN AND TYPED RESPONSE WITHIN SEVEN (7) CALENDAR DAYS OF HIS RECEIVING THE SITE VISIT REPORT. THE CONTRACTORS SHALL ACCOMPANY THE ENGINEER DURING THIS FINAL PUNCHLIST VISIT UPON THE REQUEST OF THE ENGINEER. THE GENERAL CONTRACTOR SHALL INCLUDE IN HIS RESPONSE THE FOLLOWING INFORMATION.
    1 DATE OF SITE VISIT BY THE ENGINEER,
    2 DATE OF RECEIPT OF THE SITE VISIT REPORT,
    3 NAME AND TITLE OF THE PREPARER OF THE RESPONSE,
    4 AN ITEM NUMBER REFERENCED TO THE SITE REPORT,
    5 A BRIEF THREE OR FOUR WORD DESCRIPTION OF THE ITEM,
    6 THE CONTRACTOR OR SUBCONTRACTOR AFFECTED,
    7 THE PROPOSED COURSE OF ACTION, AND
    8 AN EXPECTED TIME OF COMPLETION OF THE ACTION.

29. FINAL PUNCH REPORTS:
AT THE COMPLETION OF THE JOB, THE ENGINEER WILL MAKE PUNCHLIST SITE VISITS TO OBSERVE COMPLETED WORK AND WILL SUBSEQUENTLY PREPARE A WRITTEN SITE VISIT PUNCHLIST REPORT, WHICH WILL BE SENT TO THE CONTRACTOR AND TO WHOMEVER ELSE THE ENGINEER DESIRES. THE CONTRACTOR, UPON COMPLETION OF THE LISTED PUNCHLIST ITEMS, SHALL PREPARE A TYPEWRITTEN RESPONSE TO THE LIST INDICATING COMPLETION OF EACH ITEM. THE CONTRACTOR SHALL INCLUDE IN HIS RESPONSE THE RESOLUTION OF EACH ITEM. THE CONTRACTORS SHALL ACCOMPANY THE ENGINEER DURING THIS FINAL PUNCHLIST VISIT UPON THE REQUEST OF THE ENGINEER.

30. ALL ELECTRICAL CONDUIT AND PANEL OPENINGS SHALL BE CAPPED DURING DEMOLITION AND CONSTRUCTION.

31. SUBSTITUTED PRODUCTS
    A. MATERIAL OR EQUIPMENT SPECIFIED BY MANUFACTURER'S NAME IS BEING USED AS A BASIS OF STANDARD. NO SUBSTITUTION IS ALLOWABLE WITHOUT ENGINEER'S WRITTEN APPROVAL TEN (10) DAYS PRIOR TO BID DUE DATE UNLESS THE MANUFACTURER IS LISTED ON THE DRAWINGS OR IN THE SPECIFICATION AS BEING A PREAPPROVED ALTERNATIVE MANUFACTURER. ANY SUBMITTAL RECEIVED WITHOUT SUCH WRITTEN APPROVAL OR PRIOR APPROVAL IS SUBJECT TO UNQUALIFIED REJECTION.
    B. IT SHALL BE THE CONTRACTOR'S RESPONSIBILITY TO VERIFY THAT SUBMITTED SUBSTITUTE EQUIPMENT WILL FIT IN SPACE AVAILABLE. THE CONTRACTOR'S SUBMITTAL FOR ACCEPTANCE OF THE SUBSTITUTE SHALL INCLUDE A WRITTEN STATEMENT OF WHETHER OR NOT SUCH ACCEPTANCE WOULD REQUIRE ANY SUBSEQUENT OR ASSOCIATED CHANGES TO THE DRAWINGS OR SPECIFICATIONS. ANY SUCH CHANGES SHALL BE DESCRIBED IN WRITING, BRIEFLY BUT COMPLETE.
    C. THE CONTRACTOR SHALL BE RESPONSIBLE FOR THE COSTS OF ANY SUCH MODIFICATIONS DUE TO SUBSTITUTION OF MATERIALS OR EQUIPMENT FOR THAT WHICH WAS SPECIFIED OR SCHEDULED. THE COST SHALL BE COMPLETE, THAT IS, IT SHALL INCLUDE THE COST EFFECT OF ANY AND ALL OTHER TRADES.
    D. THE ENGINEER MAY REQUEST DETAILED SHOP DRAWING OR PLAN LAYOUTS OF MECHANICAL ROOMS OR SYSTEMS OF THE SUBSTITUTED EQUIPMENT.
    E. SHOULD A SUBSTITUTION BE APPROVED BY THE ENGINEER (BASED UPON THE SUBSTITUTION SUBMITTAL REVIEW) AND ACCEPTED, AND SHOULD THE SUBSTITUTE MATERIAL OR EQUIPMENT PROVE DEFECTIVE, NOT MEETING DESIGN PARAMETERS, OR OTHERWISE UNSATISFACTORY FOR THE SERVICE INTENDED WITHIN THE GUARANTEE PERIOD, THIS MATERIAL OR EQUIPMENT SHALL BE REPLACED WITH THE MATERIAL OR EQUIPMENT SPECIFIED AT NO ADDITIONAL COST TO THE OWNER.

32. SUBMITTAL REQUIREMENTS:
    A. THE INTENT OF THIS SECTION IS TO GIVE GENERAL SUBMITTAL INFORMATION, REFER TO SPECIFIC SUBMITTAL INFORMATION IN THE SUBSEQUENT ELECTRICAL SECTIONS.
    B. WITHIN 10 DAYS AFTER AWARD OF THE CONTRACT, AND BEFORE ORDERS ARE PLACED, CONTRACTOR SHALL SUBMIT SPECIFIC INFORMATION ON LIST OF EQUIPMENT AND PRINCIPAL MATERIALS SPECIFIED. CONTRACTOR SHALL INDICATE AND/OR PROVIDE NAMES OF MANUFACTURERS, CATALOG AND MODEL NUMBERS, CUT SHEETS, AND SUCH OTHER SUPPLEMENTARY INFORMATION AS NECESSARY FOR EVALUATION. MINIMUM OF SIX (6) COPIES, OR AS DIRECTED BY THE ENGINEER, OF EACH SHALL BE SUBMITTED AND SHALL INCLUDE ALL ITEMS MENTIONED BY MODEL NUMBER AND/OR MANUFACTURER'S NAME IN THE SPECIFICATIONS OR IN SCHEDULES ON THE DRAWINGS.
    C. REQUIREMENTS FOR EACH SUBMITTAL:
        1. BEAR A DATED STAMP OR SPECIFIC WRITTEN INDICATION THAT THE CONTRACTOR HAS REVIEWED AND APPROVED ALL SUBMITTAL PRIOR TO SUBMISSION TO ENGINEER,
        2. HAVE ALL INFORMATION DELETED BY CONTRACTOR THAT PERTAINS TO THE MEANS AND METHODS OF CONSTRUCTION OR TO FABRICATION, ASSEMBLY, INSTALLATION, OR ERECTION (APPROVAL BY ENGINEER SHALL NOT EXTEND TO THESE AREAS UNLESS SPECIFICALLY NOTED BY ENGINEER),
        3. **BE CLEARLY AND SPECIFICALLY MARKED AS TO WHICH SPECIFIC PIECE OF EQUIPMENT IS BEING** SUBMITTED, BY USE OF A PERMANENT MARKER, STAMP, ETC., SO AS TO DISTINGUISH IT FROM OTHER PIECES OF EQUIPMENT THAT MAY OCCUR ON THE SAME PAGE.
        4. **BE CLEARLY AND SPECIFICALLY MARKED AS TO WHICH AVAILABLE OPTIONS ARE BEING SUBMITTED** THAT ARE ASSOCIATED WITH A PIECE OF EQUIPMENT, AND BE COMPLETE WITH RESPECT TO QUANTITIES, DIMENSIONS, SPECIFIC PERFORMANCE, MATERIALS, AND SIMILAR DATA TO ENABLE THE ENGINEER TO REVIEW THE PROPOSED EQUIPMENT.
        5. BE COMPLETE WITH RESPECT TO QUANTITIES, DIMENSIONS, SPECIFIC PERFORMANCE, MATERIALS, AND SIMILAR DATA TO ENABLE THE ENGINEER TO REVIEW THE PROPOSED EQUIPMENT
        6. **BE CLEARLY AND SPECIFICALLY MARKED AS TO ANY AND ALL SUBMITTAL DEVIATIONS FROM THE** DESIGN SPECIFICATION REQUIREMENTS SHALL BE PROVIDED IN WRITTEN FORM.
        7. OMISSION BY CONTRACTOR OF ANY OF THE ABOVE REQUIREMENTS OR SUBMITTALS WILL SUBJECT SUBMITTAL TO AUTOMATIC REJECTION WITHOUT REVIEW.
        8. ANY SUBMITTALS RECEIVED BY ENGINEER THAT WERE NOT REQUESTED SHALL BE RETURNED WITHOUT REVIEW OF ANY KIND. SUBMITTALS SHALL INDICATE MINIMUM ACCESS AND SERVICE CLEARANCES IF REQUIRED BY THE SUBMITTED EQUIPMENT.
    D. INSTALLATION INSTRUCTIONS – FOR CERTAIN PRODUCTS OR SYSTEMS AS IDENTIFIED IN SUBSEQUENT SPECIFICATIONS SECTIONS OR ON THE DRAWINGS, THE CONTRACTOR SHALL BE REQUIRED TO PROVIDE COPIES OF MANUFACTURER'S INSTALLATION INSTRUCTIONS WITH THE SUBMITTAL. WHEN REQUIRED AS SUCH, THE INSTALLATION INSTRUCTIONS ARE CONSIDERED PART OF THE SUBMITTAL AND THEIR OMISSION MAY RESULT IN AUTOMATIC REJECTION OF THE SUBMITTAL. WHERE MORE THAN ONE IDENTICAL DEVICE ARE SCHEDULED, ONLY ONE SET OF INSTALLATION INSTRUCTIONS NEEDS TO BE SUBMITTED, E.G. IF SEVEN 200A 208V/3P PANELS ARE SCHEDULED, ONLY ONE 200A 208V/3P PANELS INSTALLATION INSTRUCTION NEEDS TO BE SUBMITTED. SIMILARLY, IF ONE SET OF INSTALLATION INSTRUCTIONS IS IDENTIFIED BY THE MANUFACTURER AND ON THE INSTRUCTIONS TO BE APPLICABLE TO MORE THAN ONE TYPE OR SIZE OF DEVICES, E.G. IF ONE SET OF PANEL INSTRUCTIONS IS GOOD FOR 100A, 150, 200A, PANELS, THEN ONLY ONE INSTRUCTION SET IS REQUIRED FOR THESE DEVICES.
    E. THIS ENGINEER WILL REVIEW THE SUBMITTALS FOR APPROVAL TWICE. ANY ADDITIONAL REVIEWS THAT ARE REQUIRED BY THE ENGINEER FOR WHATEVER REASON AFTER THE INITIAL TWO REVIEWS WILL RESULT IN ADDITIONAL COMPENSATION FOR THE ENGINEER'S TIME BY THE SUBMITTING CONTRACTOR AT THE ENGINEER'S RATE.

33. REQUIRED SHOP DRAWING SUBMITTALS:
    A. LIGHTING FIXTURES (AS NOTED IN LIGHTING FIXTURE SCHEDULE)
    B. MAIN DISTRIBUTION PANEL INCLUDING CIRCUIT BREAKERS
    C. PANELBOARDS INCLUDING CIRCUIT BREAKERS
    D. RECEPTACLES AND COVER PLATES
    E. DISCONNECTS INCLUDING FUSES OR MAGNETIC STARTERS
    F. GROUNDING
    G. WIRING
    H. CONDUIT
    I. FIRE ALARM SYSTEM
    J. ACCESS CONTROL AND SECURITY SYSTEM COMPONENTS
    K. DATA CABLING, TELEPHONE WIRING, AUDIO-VISUAL CABLING
    L. JUNCTION BOXES AND ENCLOSURES

ELECTRICAL:

34. ALL EXPOSED CONDUIT SHALL BE PAINTED TO MATCH ADJACENT SURFACES.

35. PROVIDE BLANK METAL COVERPLATES OVER ALL UNUSED OUTLET BOXES. PAINT COVERPLATE TO MATCH ADJACENT SURFACES.

36. RECEPTACLE AND DATA OUTLET MOUNTING HEIGHTS INDICATED ON THE DRAWINGS ARE APPROXIMATE. THE CONTRACTOR SHALL BE RESPONSIBLE FOR COORDINATING WITH OTHER TRADES FOR EXACT HEIGHT REQUIRED. THIS REQUIREMENT ALSO APPLIES TO SWITCHES, TELEPHONE OUTLETS, DATA OUTLETS, HVAC SENSORS, ETC.. ANY DEVICE THAT HAS TO BE RELOCATED DUE TO CONTRACTOR'S FAILURE TO COORDINATE LOCATION WITH COUNTERTOPS, CHALKBOARDS, TACKBOARDS, ETC. WILL BE DONE AT NO ADDITIONAL COST TO THE OWNER.

37. ALL RECEPTACLES TO BE 20A SPECIFICATION GRADE, IVORY. WALL PLATES TO MATCH. ISOLATED GROUND DUPLEX RECEPTACLES (IG) WILL BE ORANGE BODY AND FACE PLATE. EXTERIOR RECEPTACLES SHALL BE WEATHERPROOF GFCI AND SHALL HAVE WHILE IN USE METAL WEATHERPROOF COVERS.

38. COORDINATE WORK WITH ALL OTHER TRADES GIVING SPECIAL CONSIDERATION TO WORK DONE ABOVE CEILINGS, OUTLET LOCATIONS AT MILLWORK, AND SWITCH LOCATIONS IN REGARDS TO DOOR SWINGS.

39. WIRING SHALL BE THWN COPPER WITH MINIMUM SIZE OF #12, IN MINIMUM 3/4" (EMT) CONDUIT WITH CU. EGC., UNLESS NOTED OTHERWISE.

40. INSTALL WALL MOUNTED LIGHT FIXTURES, SWITCHES, OUTLETS, AND COMMUNICATION DEVICES IN STRICT COORDINATION WITH ARCHITECTURAL DETAILS, SECTIONS AND ELEVATIONS, AND ADA REQUIREMENTS.

41. FIRESTOPPING OF PENETRATIONS IN FIRE-RATED WALLS, FLOORS, ETC. SHALL BE DONE BY A FIRESTOPPING CONTRACTOR. ELECTRICAL CONTRACTOR SHALL MAKE REQUIRED PENETRATIONS IN RATED WALL, FLOORS, ETC. NEATLY AND WITH A CUTTING TOOL, THE CONTRACTOR SHALL MAKE THE PENETRATIONS NO LARGER THAN NECESSARY, AND THE CONTRACTOR SHALL COORDINATE ALL SUCH PENETRATIONS WITH THE FIRESTOPPING CONTRACTOR BEFORE SUCH PENETRATIONS ARE MADE.

42. REFER TO SPECIFICATIONS FOR ALL COMMUNICATION SYSTEM REQUIREMENTS. (IN LIEU OF SPECS: PROVIDE 3/4" C. W/ PULLCORD FROM COMMUNICATION OUTLETS TO 6" ABOVE LAY-IN CEILING.)

43. SUPPORT ALL FIXTURES FROM STRUCTURE ABOVE CEILING TILES OR PLASTER. CEILING SHALL NOT SUPPORT FIXTURES.

44. FINISHED FLOOR ELEVATIONS FOR OUTLETS AND OTHER DEVICES ARE TO CENTER OF BOX. WHERE MILLWORK IS PRESENT, BOTTOM OF BOX SHALL BE MINIMUM OF 2" ABOVE BACK-SPLASH, REGARDLESS OF DIMENSION SHOWN ON DRAWINGS.

45. DOUBLE SET SCREW FITTINGS ARE ACCEPTABLE FOR STEEL CONDUIT AND COUPLINGS ONLY.

46. BEFORE INSTALLATION, EQUIPMENT AND DEVICES INCLUDING, BUT NOT LIMITED TO, ANY DEVICE WITH ELECTRICAL CONNECTIONS, DUCTWORK, INSULATION, PIPING, VALVES, AIR DEVICES, ETC., SHALL NOT BE STORED DIRECTLY ON GRADE OR ON A SLAB OR FLOOR. BEFORE AND AFTER INSTALLATION, SUCH EQUIPMENT AND DEVICES SHALL BE PROTECTED FROM ENTRY OF DIRT, TRASH, WATER (EXCEPT AS REQUIRED), VERMIN, ETC.

47. DEVICES THAT MIGHT CAUSE OR OPERATE WITH VIBRATION OR NOISE SHALL BE ISOLATED PER MANUFACTURER'S RECOMMENDATIONS AND/OR PER SPECIFICATIONS.

48. SWITCHBOARDS, PANEL BOARDS AND TRANSFORMERS SHALL BE CUTLER-HAMMER, SQUARE-D, EATON OR SIMILAR APPROVED BY THE ENGINEER.

49. USE THE FOLLOWING WIRING COLOR CODE:
    A. FOR WIRE SIZES 10 AWG AND SMALLER, INSTALL WIRE COLORS IN ACCORDANCE WITH THE FOLLOWING:
        1. BLACK AND RED FOR SINGLE PHASE CIRCUITS AT120/240 VOLTS.
        2. BLACK, RED, AND BLUE FOR CIRCUITS AT 120/208 VOLTS SINGLE OR THREE PHASE.
        3. ORANGE, BROWN, AND YELLOW FOR CIRCUITS AT 277/480 VOLTS SINGLE OR THREE PHASE.
    B. FOR WIRE SIZES 8 AWG AND LARGER, IDENTIFY WIRE WITH COLORED TAPE AT TERMINALS, SPLICES AND BOXES. COLORS ARE AS FOLLOWS:
        1. BLACK AND RED FOR SINGLE PHASE CIRCUITS AT 120/240 VOLTS.
        2. BLACK, RED, AND BLUE FOR CIRCUITS AT 120/208 VOLTS SINGLE OR THREE PHASE.
        3. BROWN, ORANGE, AND YELLOW FOR CIRCUITS AT 277/480 VOLTS SINGLE OR THREE PHASE.
    C. NEUTRAL CONDUCTORS: WHITE FOR 208/120V CIRCUITS. GREY FOR 480/277V CIRCUITS.
    D. BRANCH CIRCUIT CONDUCTORS: INSTALL THREE OR FOUR WIRE HOMERUNS WITH EACH PHASE UNIQUELY COLOR CODED.
    E. FEEDER CIRCUIT CONDUCTORS: UNIQUELY COLOR CODE EACH PHASE.
    F. GROUND CONDUCTORS:
        1. FOR 6 AWG AND SMALLER: GREEN.
        2. FOR 4 AWG AND LARGER: IDENTIFY WITH GREEN TAPE AT BOTH ENDS AND VISIBLE POINTS INCLUDING JUNCTION BOXES.

50. EACH 120 VOLT BRANCH CIRCUIT SHALL BE PROVIDED WITH A SEPARATE NEUTRAL, ONE FOR EACH PHASE WIRE. CIRCUIT BREAKER HANDLE TIES MAY BE USED INSTEAD OF SEPARATE NEUTRALS. COMPLY WITH ALL CODES.

51. PROVIDE ARC-FLASH LABELING ON ALL ELECTRICAL PANELS, BOTH NEW AND EXISTING. ALL LABELING SHALL BE DONE USING ANNEX H OF NFPA 70E, OR BY CALCULATIONS.

52. ALL STEP-DOWN TRANSFORMERS SHALL COMPLY WITH THE U.S. DOE 2016 LEGISLATION FOR ENERGY EFFICIENCY.

53. PROVIDE AN UN-SWITCHED PHASE WIRE FROM THE LINE SIDE OF THE ROOM'S LIGHT SWITCH TO THE EMERGENCY FIXTURE IN THAT ROOM.

54. MC CABLE MAY BE USED FOR BRANCH CIRCUITS WHERE ALLOWED BY CODE.

55. THE FIRE ALARM SYSTEMS SHOWN ON THESE PLANS ARE FOR COORDINATION AND BIDDING ONLY. THE INFORMATION SHOWN DOES NOT NECESSARILY REPRESENT THE REQUIRED FINAL ALARM SYSTEM LAYOUT REQUIREMENTS. THE FINAL ALARM SYSTEM LAYOUT IS TO BE SUBMITTED FOR PERMIT PURPOSES, AT A LATER DATE BY LICENSED ALARM SYSTEM INSTALLER. THE ALARM SYSTEM LAYOUT SHOWN IS TO BE VERIFIED WITH THE LICENSED INSTALLER PRIOR TO INSTALLATION OF CONDUIT AND DEVICE BOXES. THE FINAL LOCATION OF ALL DETECTORS (EXISTING AND NEW), AUDIO AND VISUAL ALARMS, AND ANY OTHER ALARM EQUIPMENT IS THE RESPONSIBILITY OF THE LICENSED ALARM SYSTEM INSTALLER. EQUIPMENT SPECIFICATION – TYPE, SIZE, RATING, AND ANY OTHER REQUIRED INFORMATION FOR THE REVIEW OF THE ALARM PLANS FOR PERMIT PURPOSES, IS TO BE SUPPLIED BY THE LICENSED ALARM INSTALLER ON THE FINAL ALARM SYSTEMS PLANS.

56. WHEN A FIRE SPRINKLER SYSTEM IS INSTALLED THE ASSOCIATED BACKFLOW PREVENTER HOT BOX SHALL HAVE A 20A 120V/1PH POWER SUPPLY PROVIDED TO THE HOT BOX FOR CONNECTION THE HEATER.

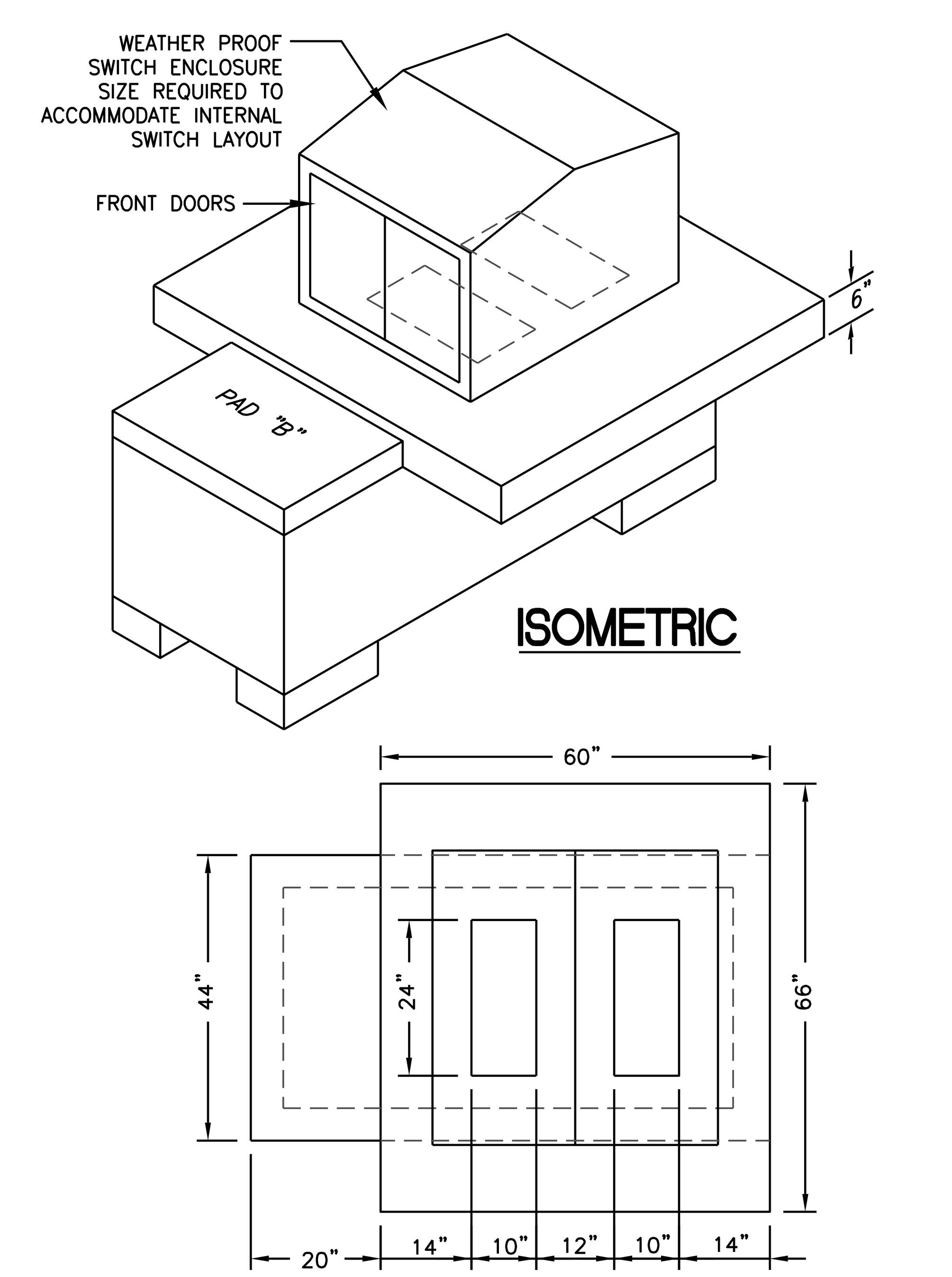

4 / E-100 EXISTING DISTRIB. SWITCH CUBICLE PULLBOX AND ISOMETRIC DETAIL

SCALE: NONE

NEW FEEDER DESIGNATION:

#1. MAIN FEED FROM EPE CO.
#2. FEEED TO EXISTING 500 KVA TRANSFORMER
#3. COTTAGE LOOP

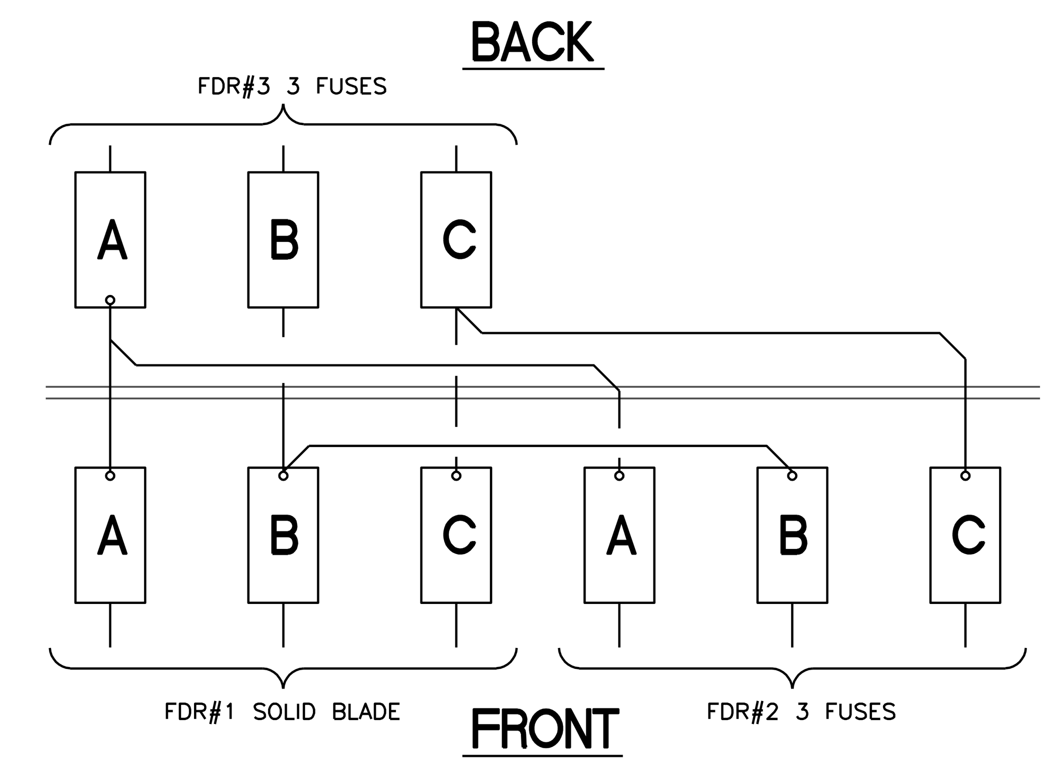

1 / E-100 EFD SWITCH CONNECTION DTL

SCALE: NONE

NOTES:

EXISTING EFD SWITCH FUSES ARE TYPE CLT, 45 C SIZE, 8300 VOLTS.

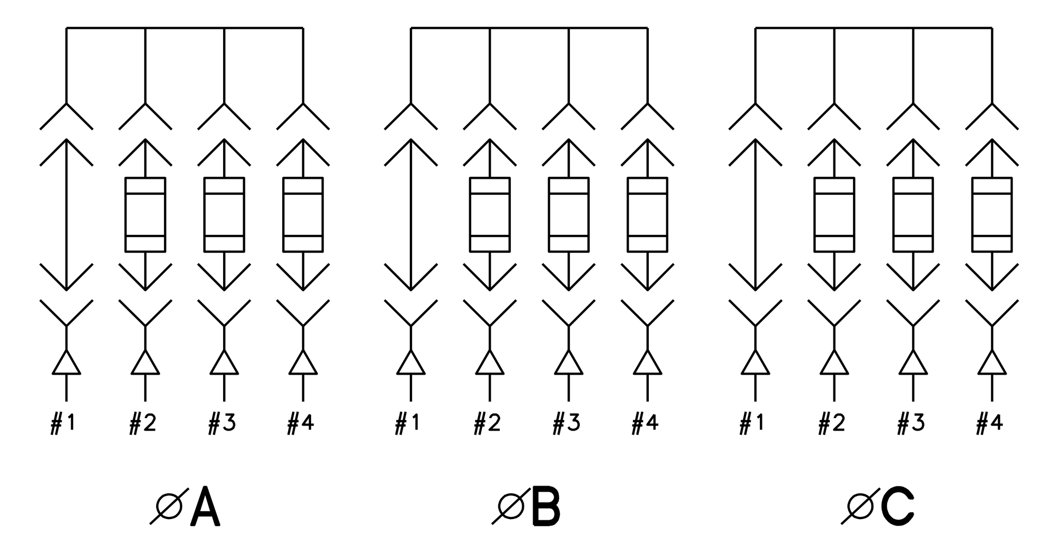

2 / E-100 EFD SWITCH ONE-LINE CONNECTION DIAGRAM

SCALE: NONE

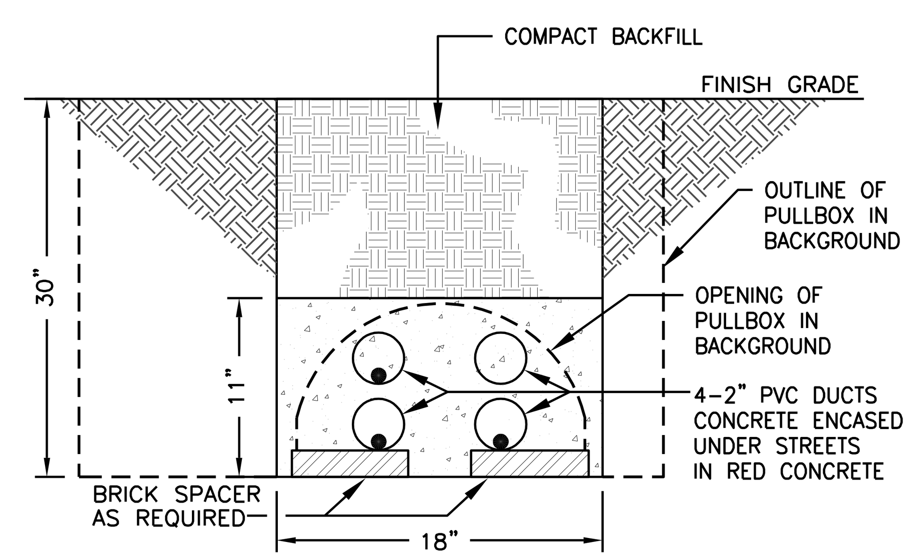

3 / E-100 NEW POWER DUCT DETAIL

SCALE: NONE

Texas 811 Know what's below. Call before you dig.

THE SEAL APPEARING ON THIS DOCUMENT WAS AUTHORIZED BY ROBERT J. BLANCHETTE, P.E.#120820 OF EMC ENGINEERS (TEXAS FIRM REG. #F2491) ON JANUARY 8, 2019. ALTERATION OF A SEALED DOCUMENT WITHOUT PROPER NOTIFICATION TO THE RESPONSIBLE ENGINEER IS AN OFFENSE UNDER THE TEXAS ENGINEERING PRACTICE ACT.

Rev.#	Date	Initials	Revision Description:
1	06/21/18	EMC	BUILDINGS 507, 512 REVISIONS

Designed By: EMC
Drawn By: EMC
Checked By: EMC
Scale: AS SHOWN

EMC ENGINEERS
2211 E. MISSOURI AVE. SUITE W-107
EL PASO, TEXAS. 79903
PH: 915-781-2030
FAX: 915-781-2055
TEXAS FIRM REG. #F2491
EMC PROJECT #1710051

Project: 18-117-EL PASO SSLC SITE ELECTRICAL AND WATER DISTRIBUTION REPLACEMENT

Location: 6700 DELTA DRIVE, EL PASO, TEXAS

Job Number: EMC-1710051
Date: 10-XX-18
Scale: AS SHOWN
Sheet E-100
X of: X

THIS DOCUMENT, WHETHER IN HARD COPY OR MACHINE READABLE FORMAT, IS COPYRIGHTED AND AN INSTRUMENT OF SERVICES IN RESPECT TO THE PROJECT FOR WHICH IT WAS PREPARED. THIS DOCUMENT IS NOT INTENDED OR AUTHORIZED FOR REUSE BY ANY PARTY ON EXTENSIONS OF SUCH PROJECT OR ANY OTHER PROJECT. ANY REUSE, INCLUDING COPYING AND/OR MODIFYING THE DOCUMENT, WITHOUT WRITTEN PERMISSION FROM EMC ENGINEERS FOR THE SPECIFIC PURPOSE INTENDED, IS A VIOLATION OF FEDERAL COPYRIGHT LAW. UNAUTHORIZED USE OF THIS MATERIAL MAY RESULT IN CIVIL AND/OR CRIMINAL PENALTIES.

COPYRIGHT 2017 EMC ENGINEERS.

ELECTRICAL DEMOLITION KEYED NOTES: ◇#

1. REMOVE SECONDARY CONDUCTORS.
2. REMOVE PRIMARY CONDUCTORS. DIRECT BURIED CONDUCTORS MAY BE CUT 24" BELOW GRADE AND ABANDONED.
3. DISTRIBUTION SWITCH REPLACED DURING EMERGENCY REPAIR. NO DEMO
4. REMOVE TRANSFORMERS. CLEAN OUT VAULT. CAP ANY UNUSED CONDUIT.
5. CLEAN OUT VAULT. CAP ANY UNUSED CONDUIT.
6. NEW CONDUIT AND CONDUCTORS PLACED DURING EMERGENCY REPAIR. NO DEMO. (2)
7. NEW VAULT PLACED DURING EMERGENCY REPAIR.

1 / E-200 ELECTRICAL DEMOLITION SITE PLAN

SCALE: 1" = 40'-0"

40 20 0 40 80

Rev.#	Date	Initials	Revision Description:
2	04/29/20	EMC	ADDENDUM 1
1	06/21/18	EMC	BUILDINGS 507, 512 REVISIONS

Designed By: EMC
Drawn By: EMC
Checked By: EMC
Scale: AS SHOWN

EMC ENGINEERS
2211 E. MISSOURI AVE., SUITE W-312
EL PASO, TEXAS, 79903
PH: 915-781-2030
FAX: 915-781-2040
TEXAS FIRM REG. #F2491
EMC PROJECT #1710051
EMC ENGINEERS

Project: 18-117-EL PASO SSLC SITE ELECTRICAL AND WATER DISTRIBUTION REPLACEMENT

Location: 6700 DELTA DRIVE, EL PASO, TEXAS

Job Number: EMC-1710051

Date: 10-XX-18

Scale: AS SHOWN

Sheet E-200

X of: X

STATE OF TEXAS
ROBERT J. BLANCHETTE
120820
4/29/20
REGISTERED PROFESSIONAL ENGINEER

THE SEAL APPEARING ON THIS DOCUMENT WAS AUTHORIZED BY ROBERT J. BLANCHETTE, P.E.#120820 OF EMC ENGINEERS (TEXAS FIRM REG. #F2491) ON APRIL 28, 2020. ALTERATION OF A SEALED DOCUMENT WITHOUT PROPER NOTIFICATION TO THE RESPONSIBLE ENGINEER IS AN OFFENSE UNDER THE TEXAS ENGINEERING PRACTICE ACT.

THIS DOCUMENT, WHETHER IN HARD COPY OR MACHINE READABLE FORMAT, IS COPYRIGHTED AND AN INSTRUMENT OF SERVICES IN RESPECT TO THE PROJECT FOR WHICH IT WAS PREPARED. THIS DOCUMENT IS NOT INTENDED OR AUTHORIZED FOR REUSE BY ANY PARTY ON EXTENSIONS OF SUCH PROJECT OR ANY OTHER PROJECT. ANY REUSE, INCLUDING COPYING AND/OR MODIFYING THE DOCUMENT, WITHOUT WRITTEN PERMISSION FROM EMC ENGINEERS FOR THE SPECIFIC PURPOSE INTENDED, IS A VIOLATION OF FEDERAL COPYRIGHT LAW. UNAUTHORIZED USE OF THIS MATERIAL MAY RESULT IN CIVIL AND/OR CRIMINAL PENALTIES.
COPYRIGHT 2017 EMC ENGINEERS.

ELECTRICAL KEYED NOTES:

1. NEW 100 KVA TRANSFORMER, 13.8 KV TO 240V SINGLE PHASE.
2. NEW 75 KVA TRANSFORMER, 13.8 KV TO 240V SINGLE PHASE.
3. (3) #2 UD EPR (PRYSMIAN QN4030A OR EQUAL) EACH IN 2" PVC CONDUIT. PROVIDE SPARE 2" CONDUIT CAPPED AT BOTH ENDS.
4. 15 KV, 3P WITH NEUTRAL DISTRIBUTION SWITCH FUSED AT 45A PROVIDED DURING EMERGENCY REPAIR. PROVIDE LOAD BREAK ELBOWS AND FUSES FOR 2 NEW CONDUCTORS TO BE INSTALLED. PROVIDE OWNER WITH (3) SPARE FUSES.
5. NEW SECONDARY CONDUCTORS, SIZE AND TYPE PER RISER.
6. (1) #2 UD EPR (PRYSMIAN QN4030A) IN 2" PVC CONDUIT AND (3) EMPTY 2" CONDUITS. INSTALLED DURING EMERGENCY REPAIR. PROVIDE #2 UD EPR (PRYSMIAN QN4030A OR EQUAL) IN EACH OF (2) CONDUITS.
7. VAULT INSTALLED DURING EMERGENCY REPAIR.

ELECTRICAL REMODEL SITE PLAN

1 / E-300

SCALE: 1" = 40'-0"

40 20 0 40 80

Rev.#	Date	Initials	Revision Description:
1	06/21/18	EMC	BUILDINGS 507, 512 REVISIONS

Designed By: EMC
Drawn By: EMC
Checked By: EMC
Scale: AS SHOWN

EMC ENGINEERS
2211 E. MISSOURI AVE., SUITE W-107
EL PASO, TEXAS, 79903
PH: 915-781-2030
FAX: 915-781-2203
TEXAS FIRM REG. #F2491
EMC PROJECT #1710051

Project: 18-117-EL PASO SSLC SITE ELECTRICAL AND WATER DISTRIBUTION REPLACEMENT

Location: 6700 DELTA DRIVE, EL PASO, TEXAS

Job Number: EMC-1710051

Date: 10-XX-18

Scale: AS SHOWN

Sheet E-300

X of: X

THE SEAL APPEARING ON THIS DOCUMENT WAS AUTHORIZED BY ROBERT J. BLANCHETTE, P.E.#120820 OF EMC ENGINEERS (TEXAS FIRM REG. #F2491) ON JANUARY 8, 2019. ALTERATION OF A SEALED DOCUMENT WITHOUT PROPER NOTIFICATION TO THE RESPONSIBLE ENGINEER IS AN OFFENSE UNDER THE TEXAS ENGINEERING PRACTICE ACT.

THIS DOCUMENT, WHETHER IN HARD COPY OR MACHINE READABLE FORMAT, IS COPYRIGHTED AND AN INSTRUMENT OF SERVICES IN RESPECT TO THE PROJECT FOR WHICH IT WAS PREPARED. THIS DOCUMENT IS NOT INTENDED OR AUTHORIZED FOR REUSE BY ANY PARTY ON EXTENSIONS OF SUCH PROJECT OR ANY OTHER PROJECT. ANY REUSE, INCLUDING COPYING AND/OR MODIFYING THE DOCUMENT, WITHOUT WRITTEN PERMISSION FROM EMC ENGINEERS FOR THE SPECIFIC PURPOSE INTENDED, IS A VIOLATION OF FEDERAL COPYRIGHT LAW. UNAUTHORIZED USE OF THIS MATERIAL MAY RESULT IN CIVIL AND/OR CRIMINAL PENALTIES.
COPYRIGHT 2017 EMC ENGINEERS.

ELECTRICAL KEYED NOTES: (#)

1. EXISTING 3" CONDUIT WITH (2) 500 KCMIL THWN, (1) 350 KCMIL THWN NEUTRAL & (1) #2 EGC.
2. EXISTING 1-1/2" CONDUIT WITH (2) #1 THWN, (1) #1 THWN NEUTRAL & (1) #6 EGC.
3. EXISTING 3/4" CONDUIT WITH (1) #1/0 CU. GEC. TO BUILDING'S COLD WATER SERVICE ENTRY.
4. EXISTING 3" CONDUIT WITH (2) 500 KCMIL THWN, (1) 250 KCMIL THWN NEUTRAL & (1) #6 EGC.
5. EXISTING 2" CONDUIT WITH (2) #3/0 THWN, (1) #2 THWN NEUTRAL & (1) #4 EGC.
6. EXISTING 3/4"x10' COPPER CLAD GROUND ROD CONNECTED TO PRIMARY CABLE CONCENTRIC NEUTRAL, TRANSFORMER CASE AND NEUTRAL, AND GROUND BOND WIRES.
7. EXISTING MOTOR CONTROLLER FOR EVAPORATIVE COOLER.
8. EXISTING FIRE ALARM MAIN DISCONNECT SWITCH.
9. EXISTING DISCONNECT SWITCH FOR EXIT LIGHTS AND EMERGENCY LIGHTING FIXTURES.
10. EXISTING TIME CLOCK FOR EXTERIOR LIGHTS.
11. EXISTING SINGLE PHASE ELECTRIC DEMAND WATT METER.
12. EXISTING EPE CO. METER ENCLOSURE AND METERING DEVICE.
13. EXISTING SPLICE TO HIGH VOLTAGE SERVICE CABLES.
14. EXISTING 12"Hx12"Wx8"D NEMA 3R J-BOX MOUNTED BELOW METER SOCKET WITH SPLICE ON 250 KCMIL CONDUCTORS TO 400 KCMIL CONDUCTORS FOR CONNECTION TO METER TERMINALS.
15. EXISTING 1-1/2" CONDUIT WITH (2) #1/0 THWN, (1) #4 THWN NEUTRAL & (1) #6 GREEN EGC.
16. (2) EXISTING 2" CONDUITS, EACH WITH (2) 250 KCMIL THWN, (1) #1/0 THWN NEUTRAL & (1) #6 EGC.
17. (2) EXISTING 3" CONDUITS, EACH WITH (2) 250 KCMIL THWN, (1) #1/0 THWN NEUTRAL & (1) #6 EGC.
18. EXISTING 3/4" CONDUIT WITH (1) #2/0 CU. GEC. TO BUILDING'S COLD WATER SERVICE ENTRY.

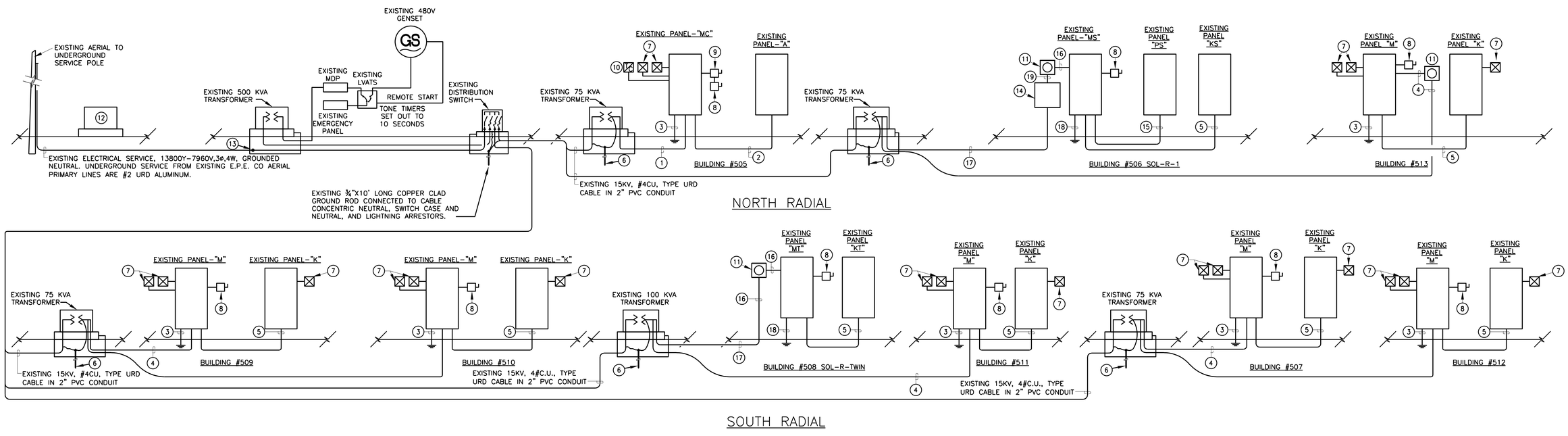

1 / E-400 **PARTIAL EXISTING ELECTRICAL RISER DIAGRAM**

SCALE: NONE

THIS DOCUMENT, WHETHER IN HARD COPY OR MACHINE READABLE FORMAT, IS COPYRIGHTED AND AN INSTRUMENT OF SERVICES IN RESPECT TO THE PROJECT FOR WHICH IT WAS PREPARED. THIS DOCUMENT IS NOT INTENDED OR AUTHORIZED FOR REUSE BY ANY PARTY ON EXTENSIONS OF SUCH PROJECT OR ANY OTHER PROJECT. ANY REUSE, INCLUDING COPYING AND/OR MODIFYING THE DOCUMENT, WITHOUT WRITTEN PERMISSION FROM EMC ENGINEERS FOR THE SPECIFIC PURPOSE INTENDED, IS A VIOLATION OF FEDERAL COPYRIGHT LAW. UNAUTHORIZED USE OF THIS MATERIAL MAY RESULT IN CIVIL AND/OR CRIMINAL PENALTIES.
COPYRIGHT 2017 EMC ENGINEERS.

THE SEAL APPEARING ON THIS DOCUMENT WAS AUTHORIZED BY ROBERT J. BLANCHETTE, P.E.#120820 OF EMC ENGINEERS (TEXAS FIRM REG. #F2491) ON 1 JANUARY, 2018. ALTERATION OF A SEALED DOCUMENT WITHOUT PROPER NOTIFICATION TO THE RESPONSIBLE ENGINEER IS AN OFFENSE UNDER THE TEXAS ENGINEERING PRACTICE ACT.

1/8/2018

Rev.#	Date	Initials	Revision Description:
1	06/21/18	EMC	BUILDINGS 507, 512 REVISIONS

EMC ENGINEERS
2211 E. MISSOURI AVE., SUITE W-107
EL PASO, TEXAS, 79903
PH: 915-781-2030
FAX: 915-780-2050
TEXAS FIRM REG. #F2491
EMC PROJECT #1710051

Designed By: EMC
Drawn By: EMC
Checked By: EMC
Scale: AS SHOWN

Project: 18-117-EL PASO SSLC SITE ELECTRICAL AND WATER DISTRIBUTION REPLACEMENT

Location: 6700 DELTA DRIVE, EL PASO, TEXAS

Job Number: EMC-1710051
Date: 10-XX-18
Scale: AS SHOWN
Sheet E-400
X of: X

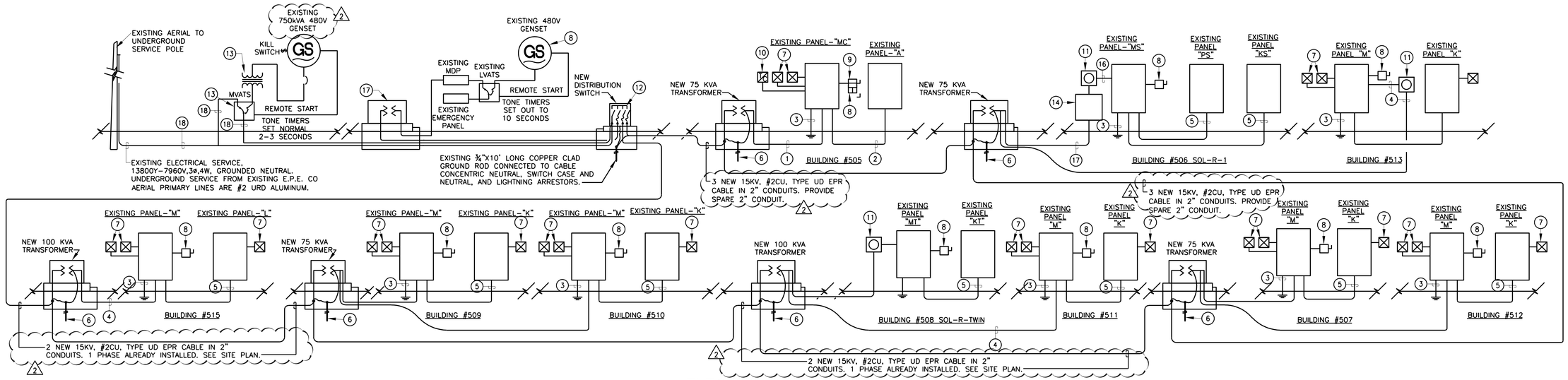

1 / E-401 **PARTIAL REMODEL ELECTRICAL RISER DIAGRAM**
SCALE: NONE

ELECTRICAL KEYED NOTES:

1. NEW (3) #3/0 IN EXISTING CONDUIT
2. EXISTING CONDUCTORS TO REMAIN
3. EXISTING #6CU TO 3/4" X 10' COPPER CLAD GROUND ROD
4. NEW (3) #400 MCM IN EXISTING CONDUIT
5. EXISTING CONDUCTORS TO REMAIN
6. NEW 3/4"x10' COPPER CLAD GROUND ROD CONNECTED TO PRIMARY CABLE CONCENTRIC NEUTRAL, TRANSFORMER CASE AND NEUTRAL, AND GROUND BOND WIRES.
7. EXISTING MOTOR CONTROLLER.
8. EXISTING FIRE ALARM MAIN DISCONNECT SWITCH.
9. EXISTING DISCONNECT SWITCH FOR EXIT LIGHTS AND EMERGENCY LIGHTING FIXTURES.
10. EXISTING TIME CLOCK FOR EXTERIOR LIGHTS.
11. EXISTING SINGLE PHASE ELECTRIC DEMAND WATT METER.
12. NEW 15 KV, 3P WITH NEUTRAL DISTRIBUTION SWITCH FUSED AT 45A INSTALLED DURING EMERGENCY REPAIR. PROVIDE (2) NEW LOAD BREAK ELBOWS AND FUSES FOR 2 NEW CONDUCTORS. PROVIDE OWNER (3) SPARE FUSES.
13. EXISTING PAD-MOUNTED 750kVA, 480V:13.8kV, THREE-PHASE TRANSFORMER.
14. EXISTING 12"Hx12"Wx8"D NEMA 3R J-BOX MOUNTED BELOW METER SOCKET WITH SPLICE ON 250 KCMIL CONDUCTORS TO 400 KCMIL CONDUCTORS FOR CONNECTION TO METER TERMINALS.
15. EXISTING 1200A, MEDIUM VOLTAGE, NEMA 3R AUTOMATIC TRANSFER SWITCH WITH MAINTENANCE BYPASS.
16. (2) EXISTING 2" CONDUITS, EACH WITH (2) 250 KCMIL THWN, (1) #1/0 THWN NEUTRAL & (1) #6 EGC.
17. EXISTING PAD-MOUNTED 750kVA, 480V:13.8kV, THREE-PHASE TRANSFORMER.
18. EXISTING CONDUCTORS.

PHASE	BUILDINGS
A	515, 507, 512
B	509, 510, 506, 513
C	508, 511, 505

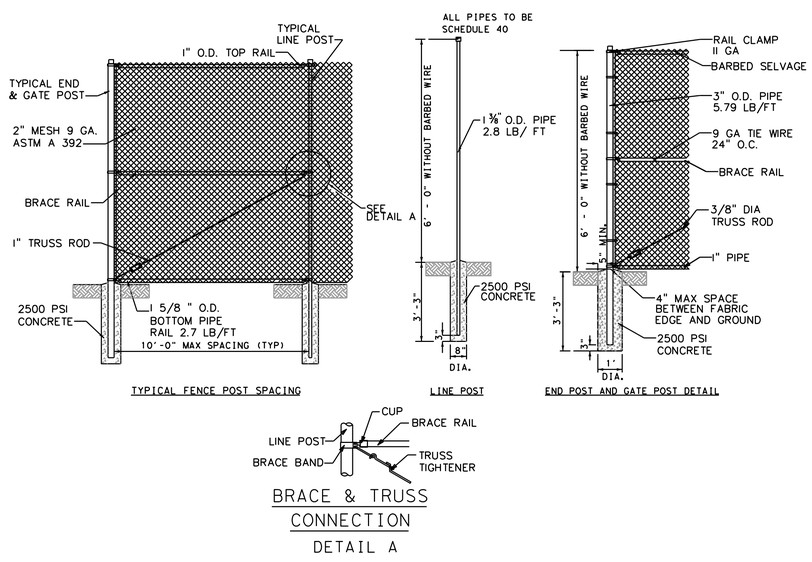

2 / E-401 **TRANSFORMER AND ATS ENCLOSURE FENCE DETAIL**
SCALE: NONE

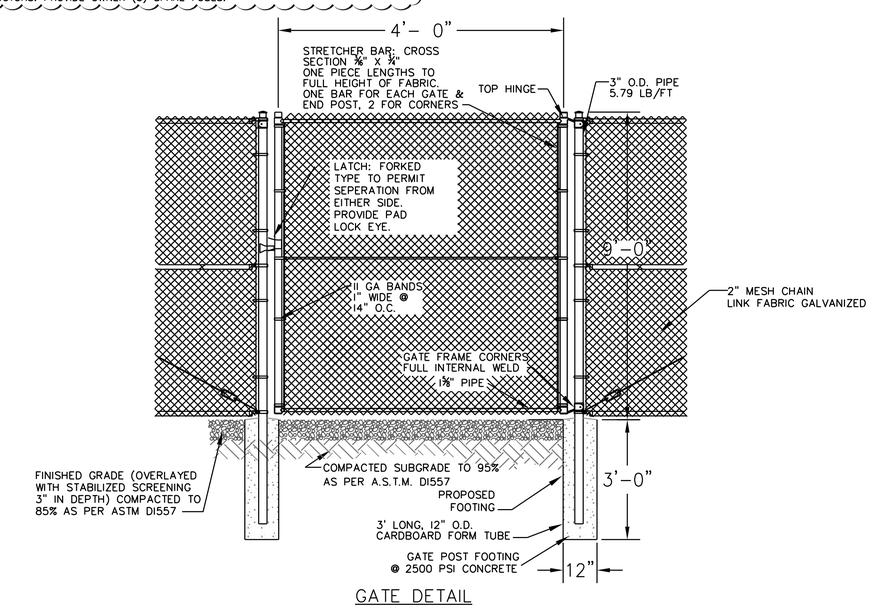

3 / E-401 **TRANSFORMER GATE DETAIL**
SCALE: NONE

THIS DOCUMENT, WHETHER IN HARD COPY OR MACHINE READABLE FORMAT, IS COPYRIGHTED AND AN INSTRUMENT OF SERVICES IN RESPECT TO THE PROJECT FOR WHICH IT WAS PREPARED. THIS DOCUMENT IS NOT INTENDED OR AUTHORIZED FOR REUSE BY ANY PARTY ON EXTENSIONS OF SUCH PROJECT OR ANY OTHER PROJECT. ANY REUSE, INCLUDING COPYING AND/OR MODIFYING THE DOCUMENT, WITHOUT WRITTEN PERMISSION FROM EMC ENGINEERS FOR THE SPECIFIC PURPOSE INTENDED, IS A VIOLATION OF FEDERAL COPYRIGHT LAW. UNAUTHORIZED USE OF THIS MATERIAL MAY RESULT IN CIVIL AND/OR CRIMINAL PENALTIES.
COPYRIGHT 2017 EMC ENGINEERS.

Rev.#	Date	Initials	Revision Description:
2	04/29/20	EMC	ADDENDUM 1
1	06/21/18	EMC	BUILDINGS 507, 512 REVISIONS

Designed By: EMC
Drawn By: EMC
Checked By: EMC
Scale: AS SHOWN

EMC ENGINEERS
2211 E. MISSOURI AVE., SUITE W-312
EL PASO, TEXAS, 79903
PH: 915-781-2030
FAX: 915-780-2080
TEXAS FIRM REG. #F2491
EMC PROJECT #1710051
EMC ENGINEERS

Project: 18-117-EL PASO SSLC SITE ELECTRICAL AND WATER DISTRIBUTION REPLACEMENT
Location: 6700 DELTA DRIVE, EL PASO, TEXAS

STATE OF TEXAS
ROBERT J. BLANCHETTE
120820
REGISTERED
PROFESSIONAL ENGINEER
4/29/20

THE SEAL APPEARING ON THIS DOCUMENT WAS AUTHORIZED BY ROBERT J. BLANCHETTE, P.E.#120820 OF EMC ENGINEERS (TEXAS FIRM REG. #F2491) ON APRIL 29, 2020. ALTERATION OF A SEALED DOCUMENT WITHOUT PROPER NOTIFICATION TO THE RESPONSIBLE ENGINEER IS AN OFFENSE UNDER THE TEXAS ENGINEERING PRACTICE ACT.

Job Number: EMC-1710051
Date: 10-XX-18
Scale: AS SHOWN
Sheet E-401
X of: X